Towel Rail Installation

· Read the instruction sheet carefully before installation.

· Installation should be completed by a professional electrician.

· Please dispose the package properly.

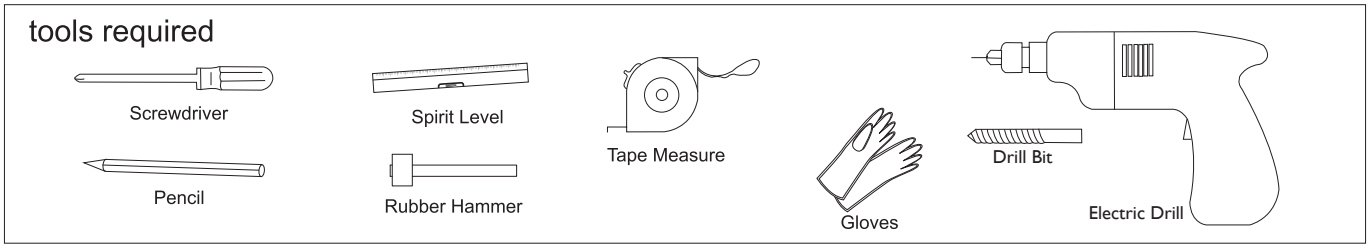

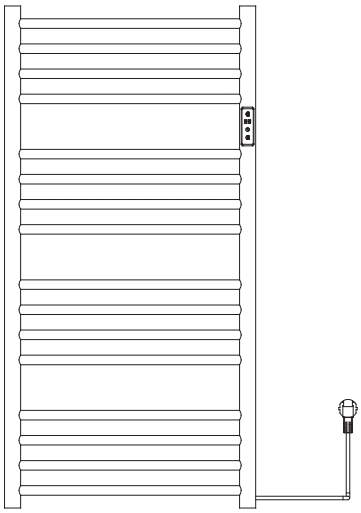

	Round tube support tube	X 3
	Surface-mounted circular support tube (with wire-passing notch)	X 1
	New expansion tube	X 4
	Expansion screw	X 4
	Mounting base	X 4
	Phillips pan head screw	X 3
	Cone point set screw	X 5
	Allen wrench	X 1

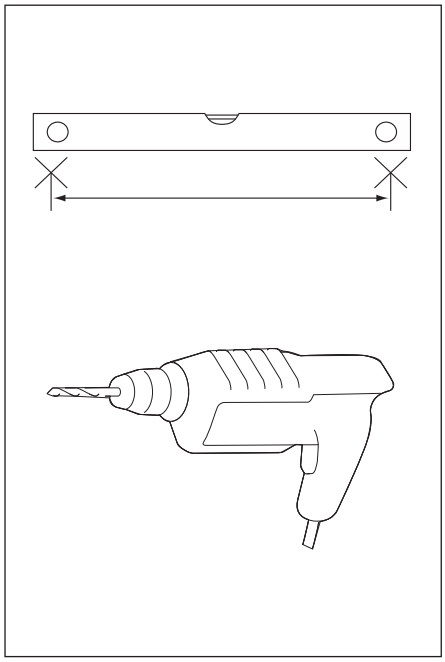

step 1
Please confirm the installation location before installation

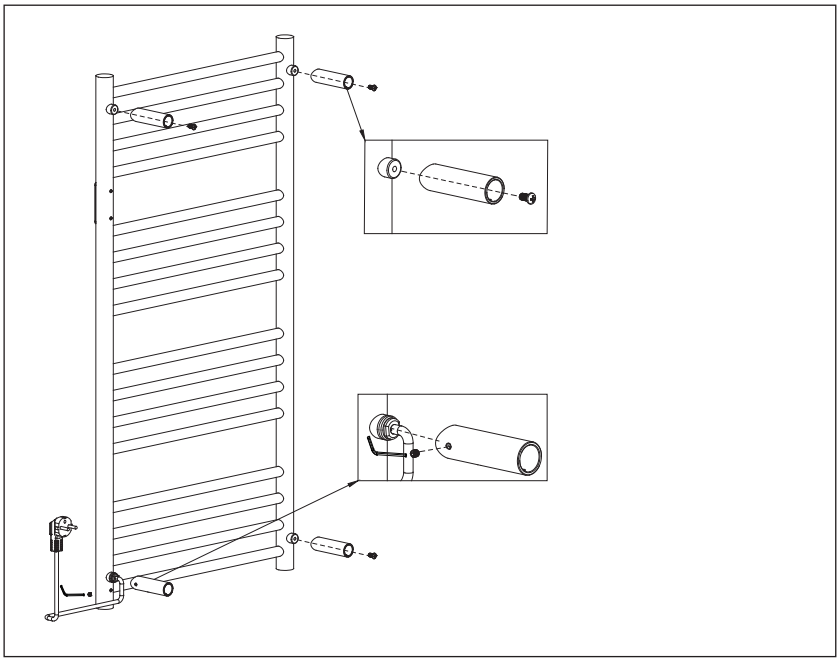

step 2
Fix the three round tube support tubes to the nut posts on the back of the towel rack with cross pan head screws M6*12. Put a surface-mounted circular support tube with a wire-passing notch into the nut column at the position of the power wire, and fix the set screw M5x6 with the tapered end with an inner hexagonal wrench.

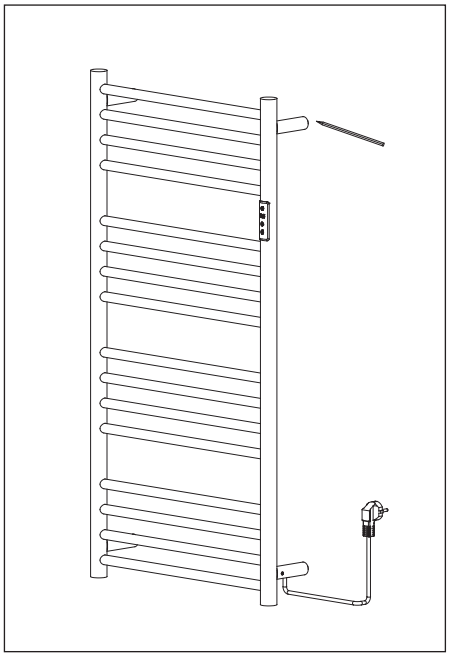

step 3
Place the towel rack on the wall to be installed, and mark the location of the wall bracket screws with a pencil.

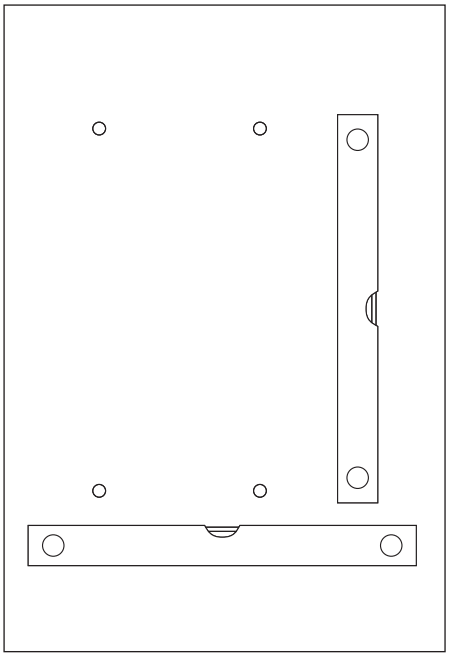

step 4
Use an 8MM drill bit to drill holes at the marked locations.

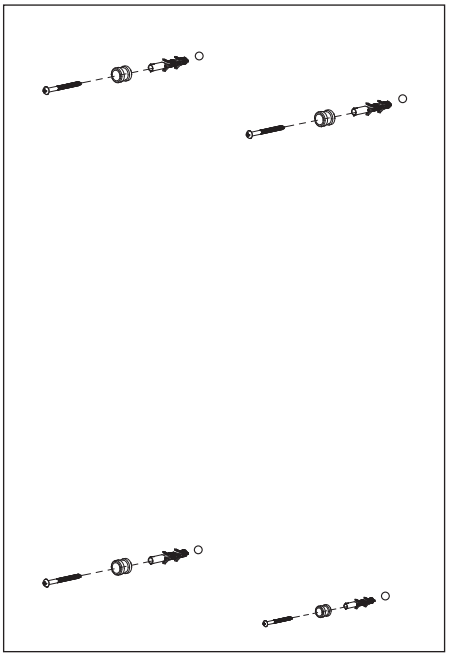

step 5
Knock the expansion tube into the drilled 8MM hole, and fix the installation base φ18*18 on the wall with expansion screws.

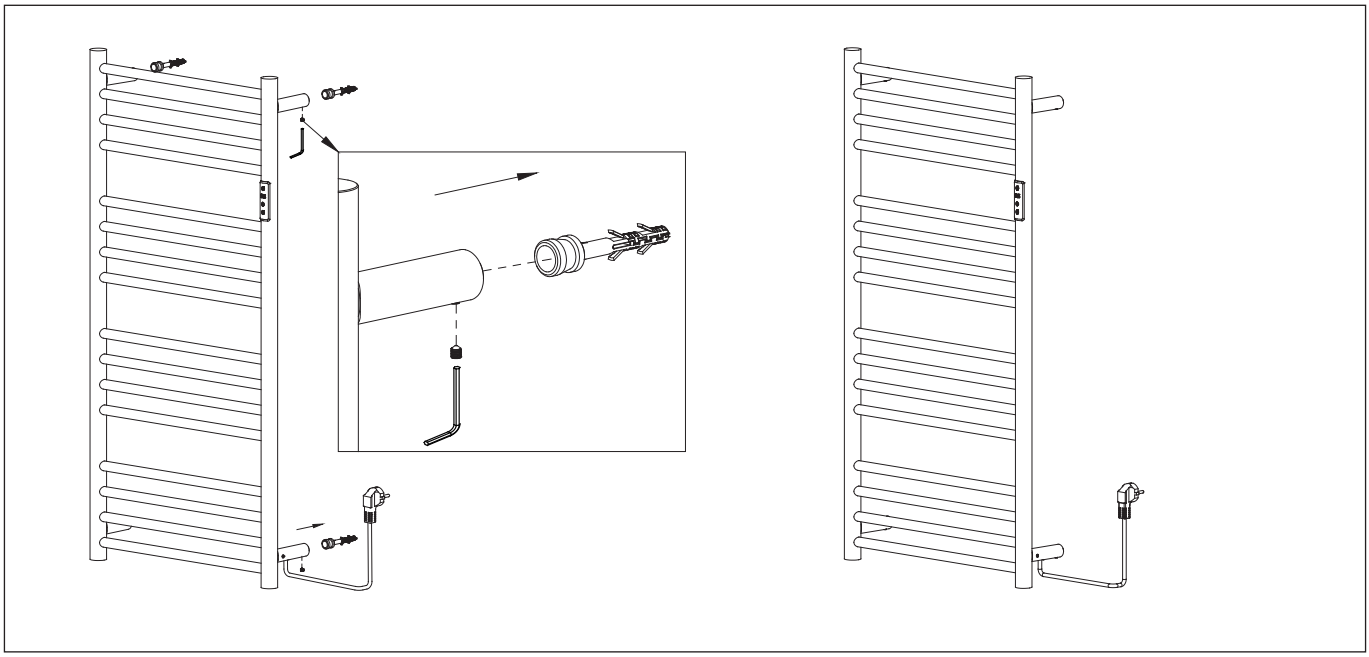

step 6
Assemble the towel rack to the mounting base on the wall, screw the tapered set screw into the screw hole of the round tube support tube with an Allen wrench and tighten it.

Towel Rail Installation

· Read the instruction sheet carefully before installation.

· Installation should be completed by a professional electrician.

· Please dispose the package properly.

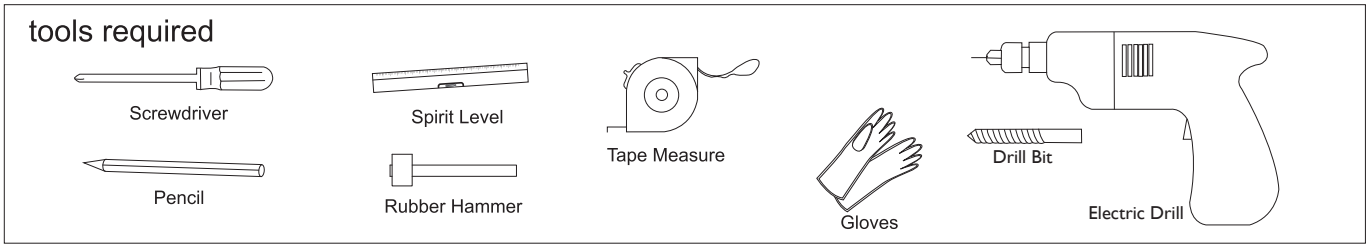

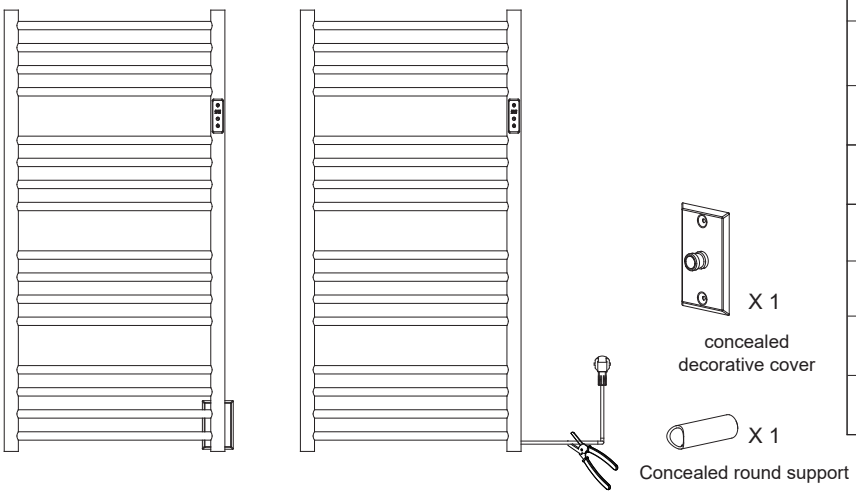

	Round tube support tube	X 3
	New expansion tube	X 3
	Expansion screw	X 3
	Mounting base	X 3
	Phillips pan head screw	X 3
	Cross recessed countersunk head tapping screw	X 2
	Cone point set screw	X 5
	Allen wrench	X 1

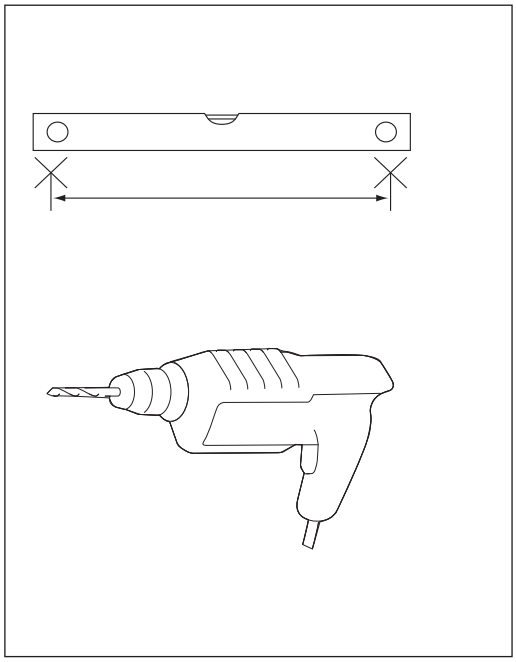

step 1
Please confirm the installation location before installation.

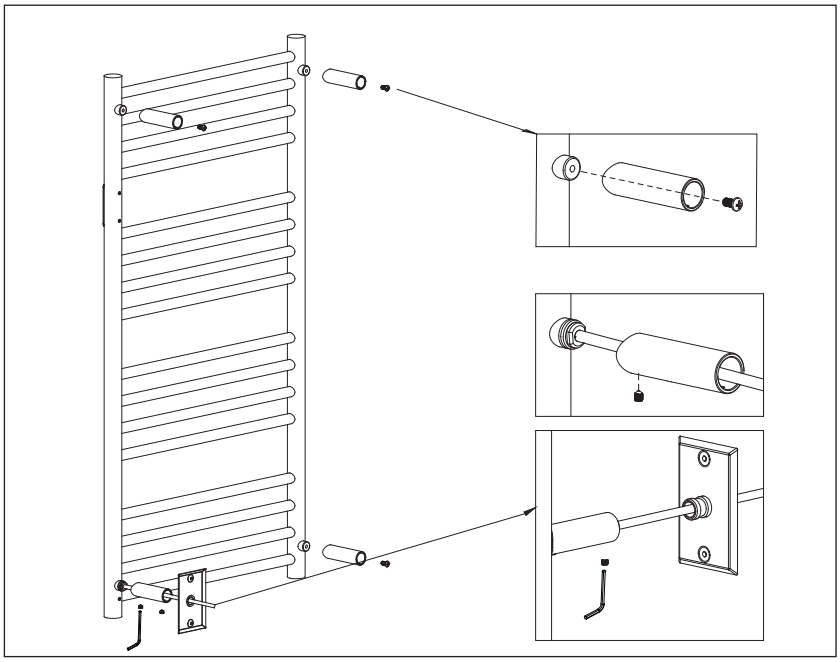

step 2
Fix the three round tube support tubes to the nut post on the back of the towel rack where the plug has been cut off with the Phillips pan head screw M6*12. Insert the concealed round support tube into the nut post at the position of the power cord, and fix the two M5x6 tapered set screws with the nut post and the concealed decorative cover with an inner hexagonal wrench respectively.

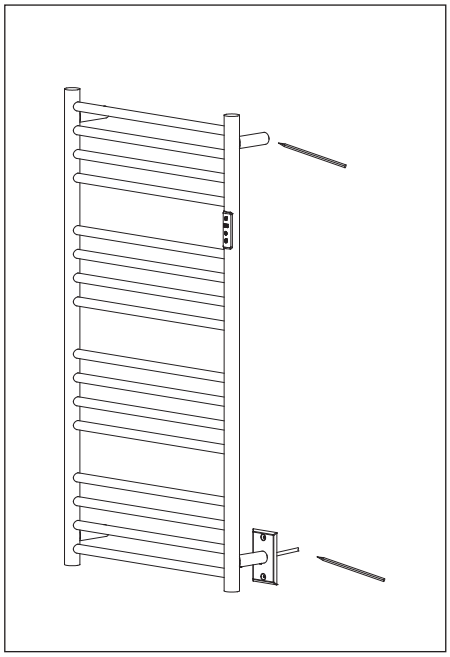

step 3
Place the towel rack on the wall to be installed, and use a pencil to mark the position of the wall bracket screw and the decorative cover for concealed installation.

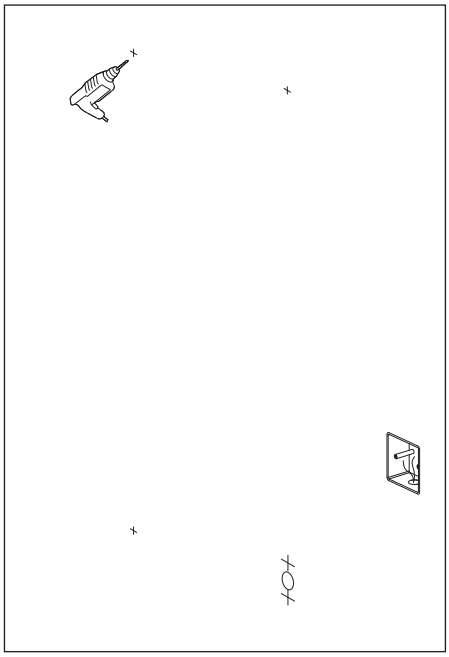

step 4
Use an 8MM drill bit to drill holes at the marked locations.

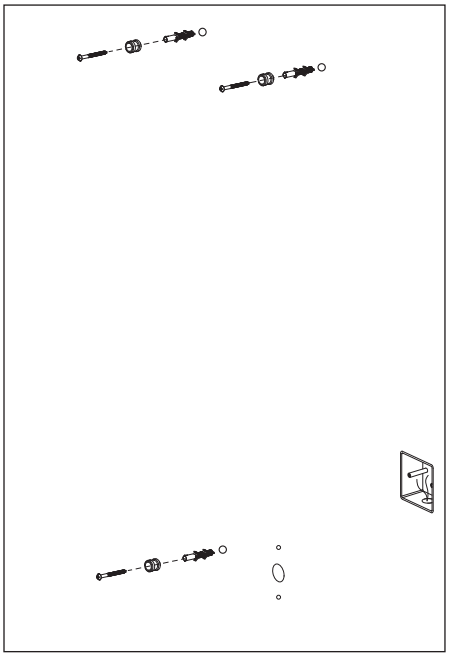

step 5
Knock the expansion tube into the drilled 8MM hole, and fix the installation base φ18*18 on the wall with expansion screws.

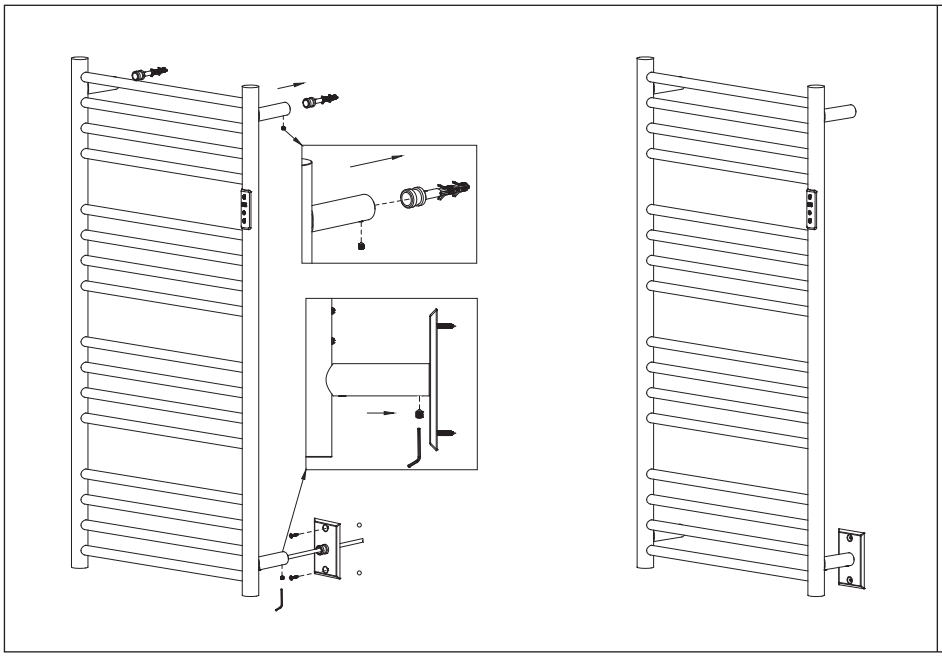

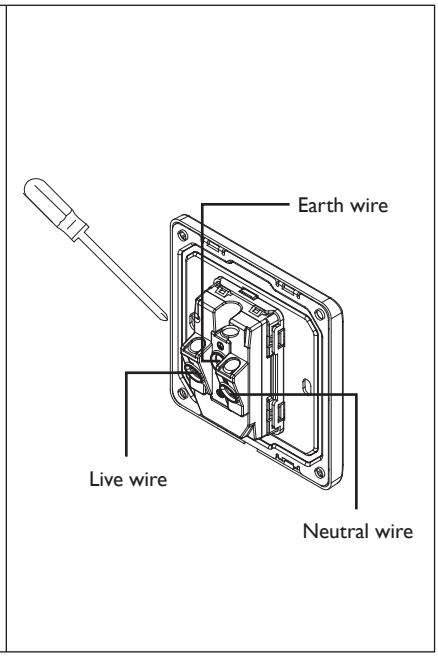

step 6
Assemble the towel rack to the mounting base on the wall, screw the tapered set screw into the screw hole of the round tube support tube with an Allen wrench and tighten it. Screw the concealed circular support tube into the screw hole of the concealed decorative cover through the tapered set screw with an Allen wrench and tighten it, and fix the concealed decorative cover on the wall with cross recessed countersunk head self-tapping screws.

step 7
Connect the towel rail power cord to the junction box.

Towel Warmer Operating Instructions

1 Basic instructions:

1.1 Power supply specification: 220-240V~,50-60Hz

1.2 Setting temperature range: 30～60℃

1.3 Timing time: 1-8 hours

2 Digital tube display description:

2.1 Shutdown state: the digital tube does not display, as shown in the following figure:

2.2 Power on: Adjustable temperature range 30～60℃ , adjustable timing time 1-8 hours and normally open (ON)

As shown in the following figures:

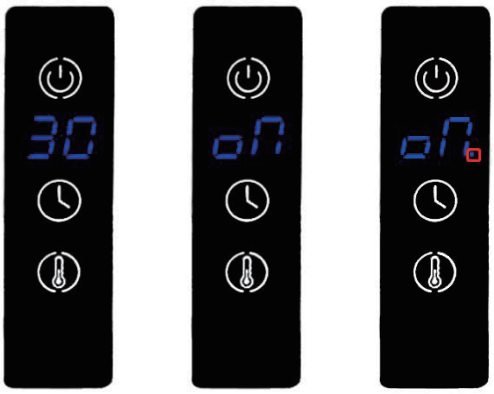

3 Operating instructions:

3.1 Power on/off: Short press to turn on the device to enter the startup state, short press again to enter the shutdown state.

3.2 Timing setting: Short press to flash, step by 1 hour, set the time until 8 hours, short press again to display the word ON (ON means open normally open state, heating has no time limit and is only affected by the set temperature). Press again for a short time to return to 1 hour. After setting it for 3 seconds, it will enter the working state without operation, and the digital tube will stop flashing; when the heating time is over, the device will automatically shut down

3.3 Temperature setting: Short press the button to flash, step by 5℃, set the temperature until it reaches 60℃, short

press again to set the temperature back to 30℃. After setting, the digital tube stops flashing if it is not operated for 3 seconds and enters the working state.

4. Error display

4.1 When the temperature probe is abnormal, the digital tube displays the following figure: