TISBD-6066-B

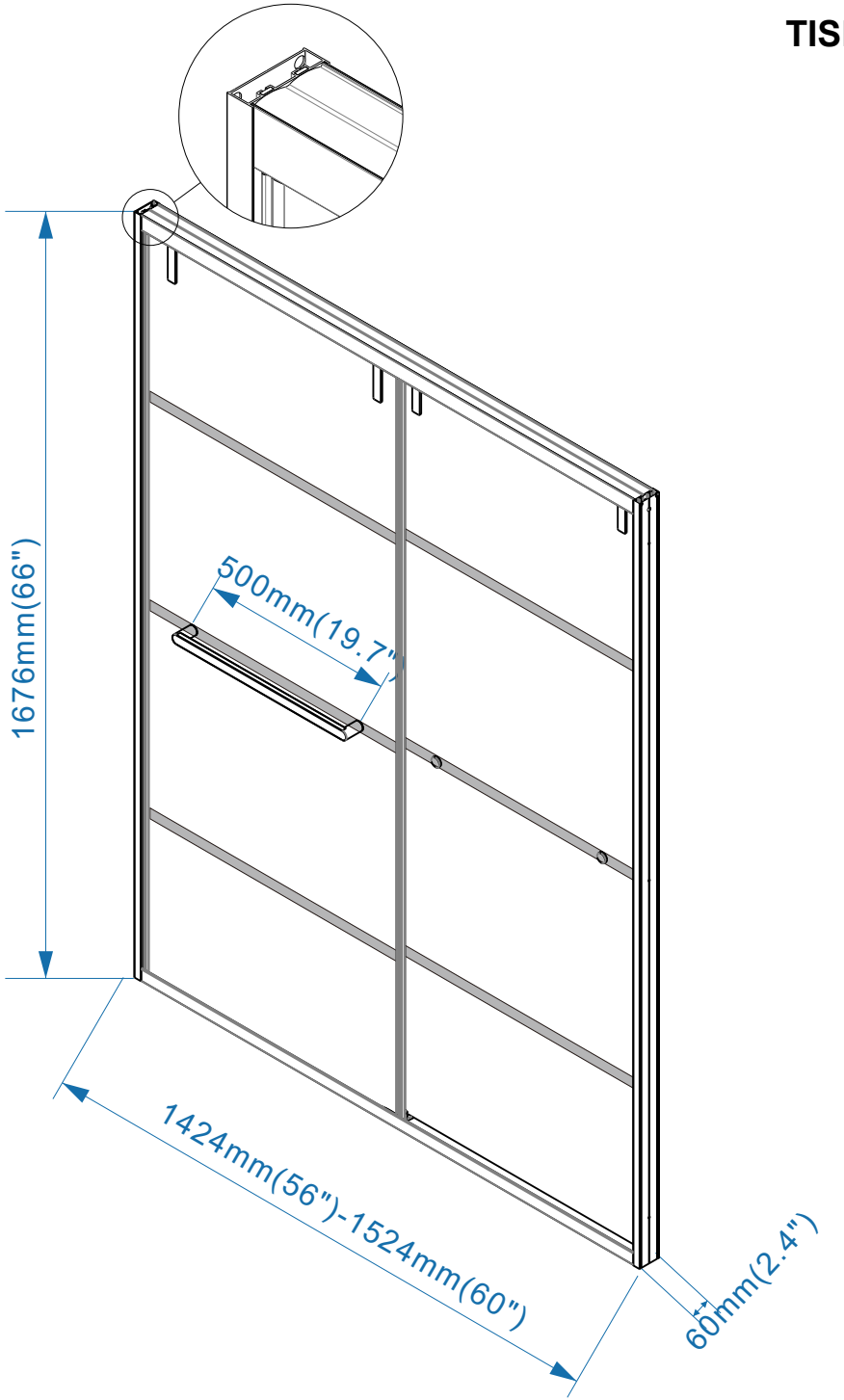

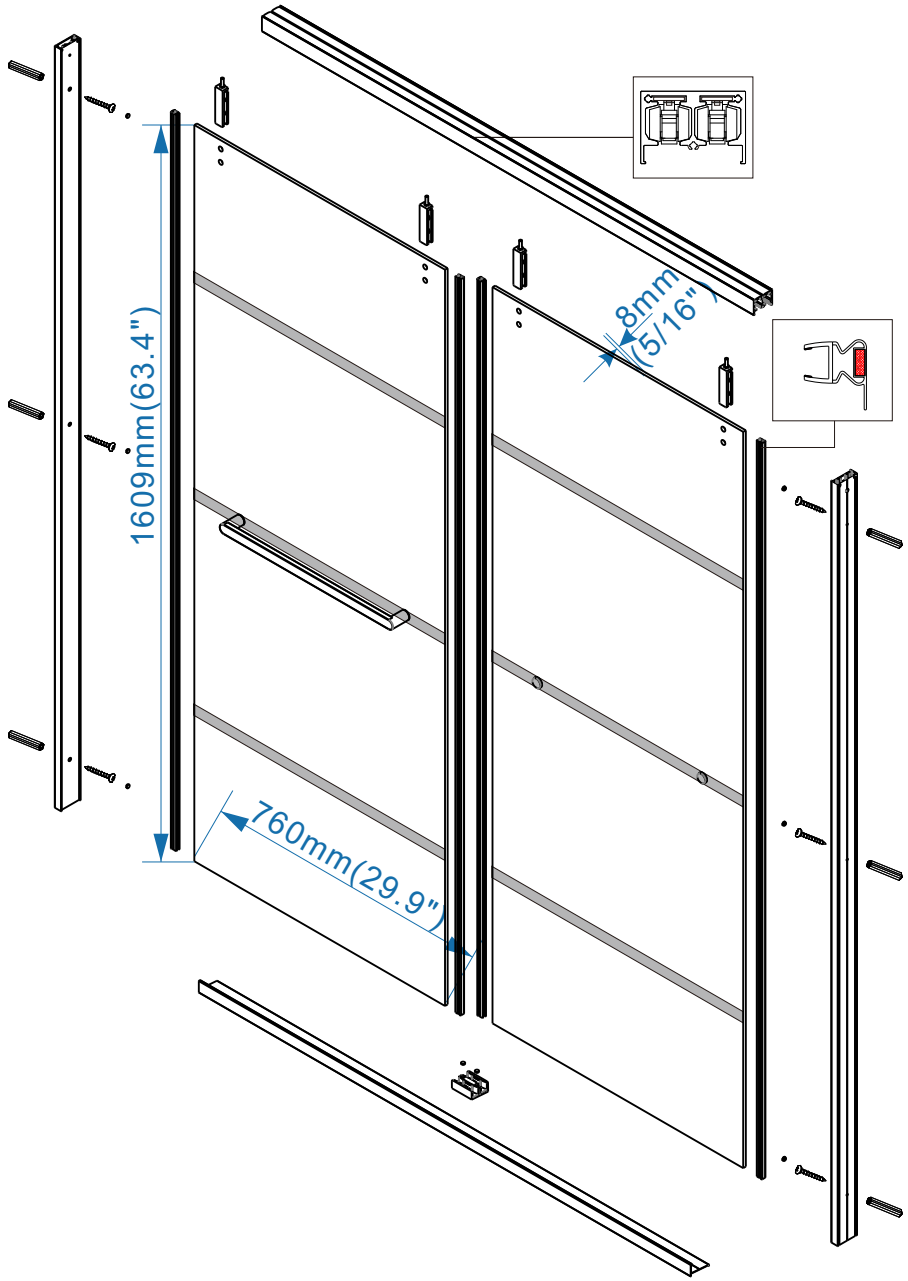

Code:TISBD-6066-B
Size:1524x1676(60"x66")