SERA BATHROOM DESIGNS

SP-102A22431SNS-BRGLD

Specifications

OPERATION

- Lever style handle with temperature indicator on the escutcheon
- Handle operates upward through a 23° arc.The rotation angle of temperature is 100°.Maximum hot through 50° in clockwise direction. Minimum cold through 50° in counterclockwise
- Adjustable temperature limit stop to control maximum hot water temperature
- Pressure balancing mechanism maintains selected discharge temperature to ±3.6°F(±2°C)

FLOW

- Showerhead is limited to 2.5gpm(9.5L/min) at 80psi
- Hand shower is limited to 2.5gpm(9.5L/min) at 80psi

CARTRIDGE

- Pressure Balance cartridge

STANDARDS

- Third party certified to meet ASME A112.18.1 all applicable requirements referenced therein

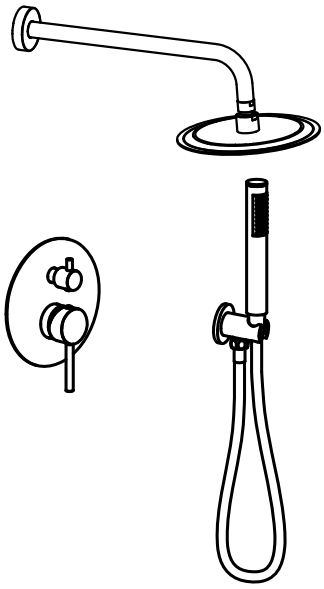

Concealed Shower Set

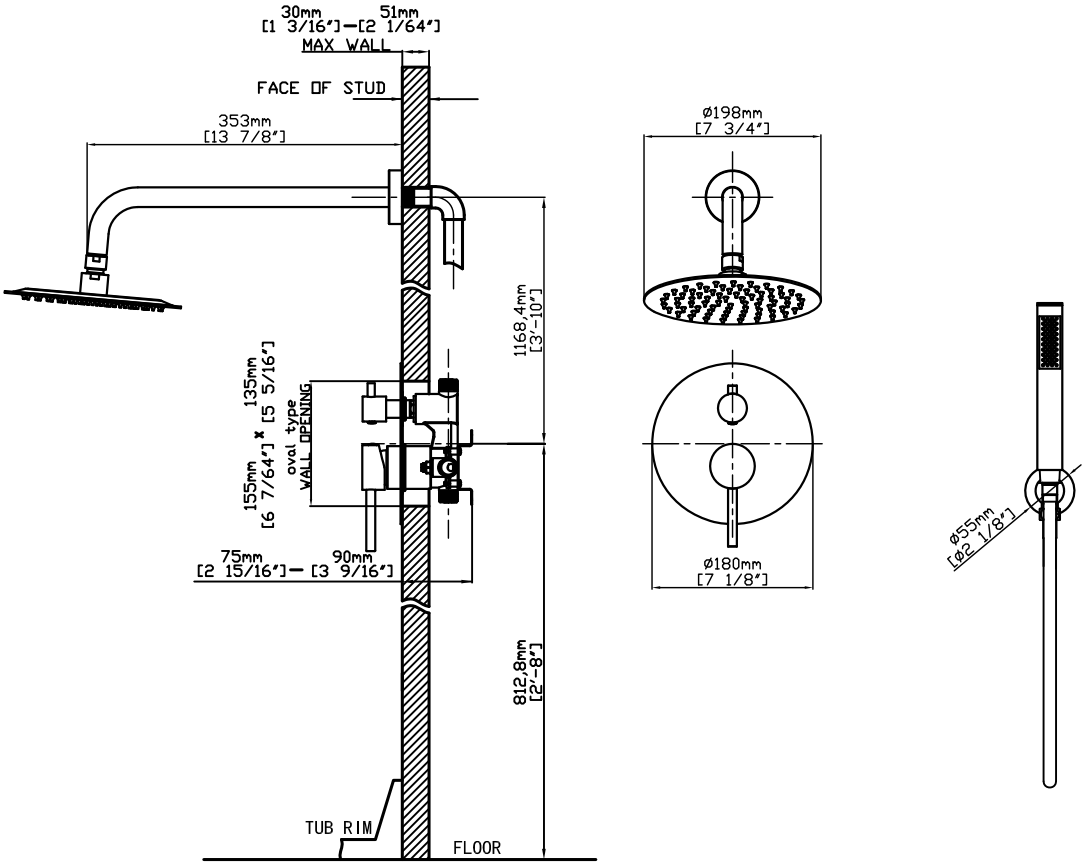

Note: Dimensions are for reference only. Detailed information is in accordance with the final product.

231020