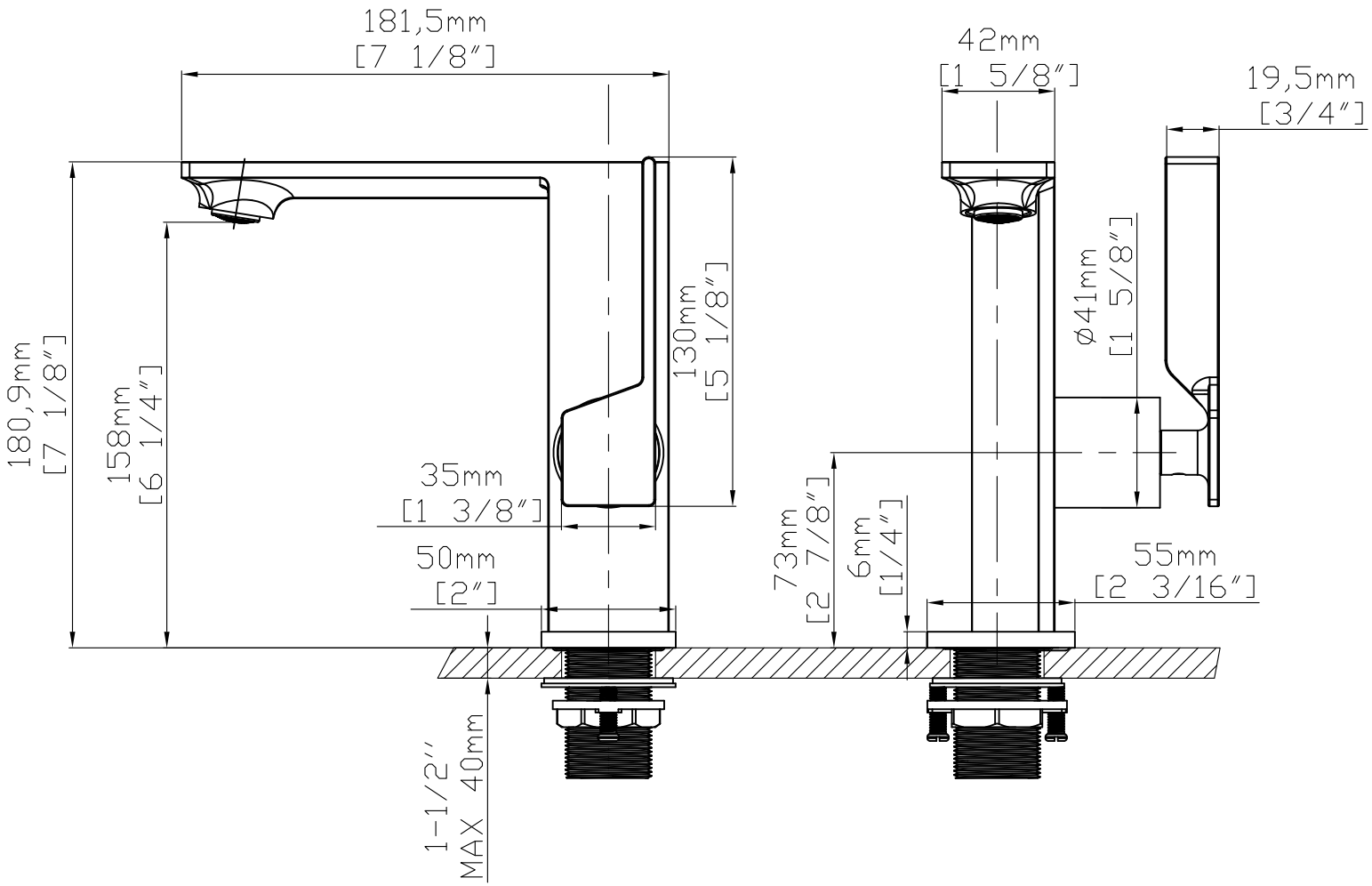SERA BATHROOM DESIGNS