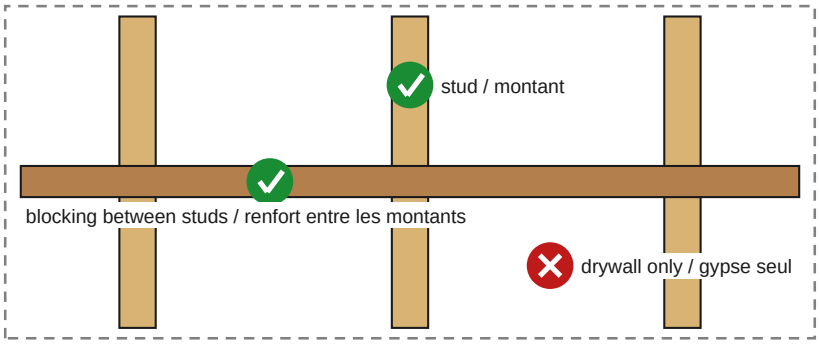

IMPORTANT: WALL MOUNTING

This vanity must be hung on the wall. Fasten the supplied wall brackets with screws into the wall studs, or into a solid backing that is itself fastened to the studs (for example a plywood panel or wood blocking installed between the studs).

Never fasten the vanity to drywall (gypsum board) or ceramic tile alone: plastic anchors in drywall will not hold its weight. On a concrete or masonry wall, use anchors made for that wall.

Legs, open shelves and metal frames offered with some versions are decorative and carry very little weight. The vanity must still be fastened to the wall studs as above.

IMPORTANT : FIXATION AU MUR

Ce meuble-lavabo doit être fixé au mur. Vissez les supports muraux fournis dans les montants du mur, ou dans un renfort solide lui-même fixé aux montants (par exemple un panneau de contreplaqué ou des entretoises de bois posés entre les montants).

Ne fixez jamais le meuble dans le gypse ou la céramique seuls : des chevilles de plastique dans le gypse ne supporteront pas son poids. Sur un mur de béton ou de maçonnerie, utilisez des ancrages conçus pour ce mur.

Les pieds, tablettes ouvertes et cadres métalliques offerts avec certaines versions sont décoratifs et ne portent presque aucun poids. Le meuble doit quand même être fixé aux montants du mur comme indiqué ci-dessus.

BATHROOM CABINET
INSTRUCTION

⚠ This instruction must be given to the user.
Guarantee/Liability only when assembled by an approved specialist in accordance with the instructions and local regulations.

BEFORE YOU BEGIN

- Please read these instructions carefully to familiarize yourself with the required tools, materials, and installation sequences. Follow the sections that pertain to your particular installation. This will help you avoid costly mistakes. In addition to properinstallation, read all operating and safety instructions.
- All information in these instructions is based upon the latest product information available at the time of publication. WE reserves the right to make changes in product characteristics, packaging, or availability at any time without notice.
- These instructions contain important care and cleaning,please leave instructions for the consumer.
- This product complies with GB 24977-2010.

SAFETY WARNINGS

The products are precision-engineered and should give continued superior and safe performance, provided:

1. They are installed, commissioned, operated and maintained in accordance with the recommendations given in this Manual.

2. Periodic attention is given, as necessary, to maintain the product in good functional order.

Carefully inspect the new fixture for any signs of damage.

When installing TONA Products, manufacturers guidelines for power tool safety should be followed.

TOOLS LIST

TOOLS AND MATERIALS REQUIRED (Not supplied)

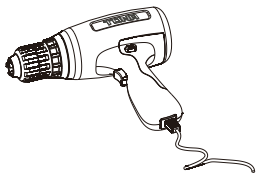
Drill


Φ8

Drill bit

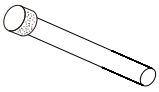
Φ8

Glass drill

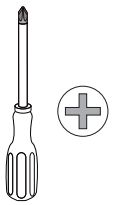
Screwdriver

Spirit level


Ruler

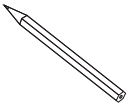
Pencil



Silicon sealant

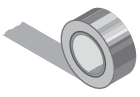
Masking tape

PARTS LIST

After unpacking, please confirm the parts and quantity according to the following. (Please check the standard accessories and choose one of the following installation methods according to the accessories.)

H90 (hanger)

Cabinet

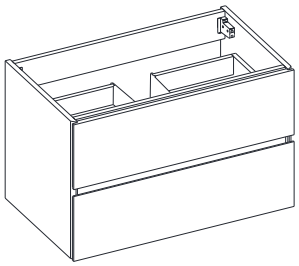

Basin

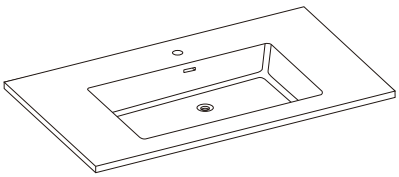

Fixed Accessories

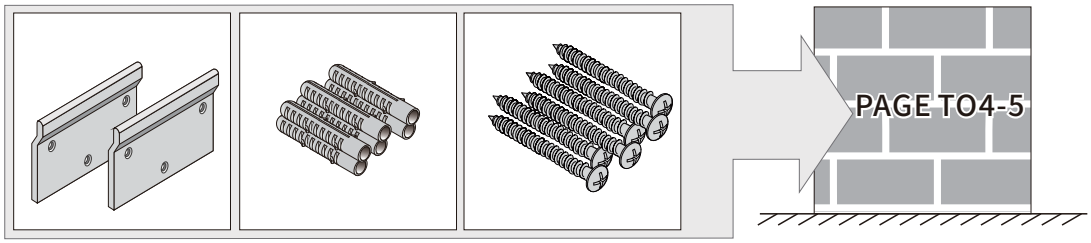

Φ8X40mm M4X50mm

H45 (oblique cut hanger)

Cabinet

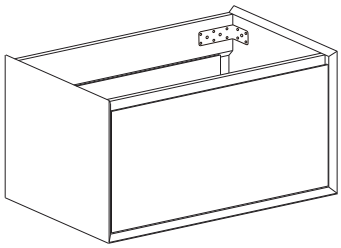

Basin

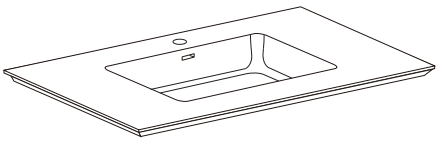

Fixed Accessories

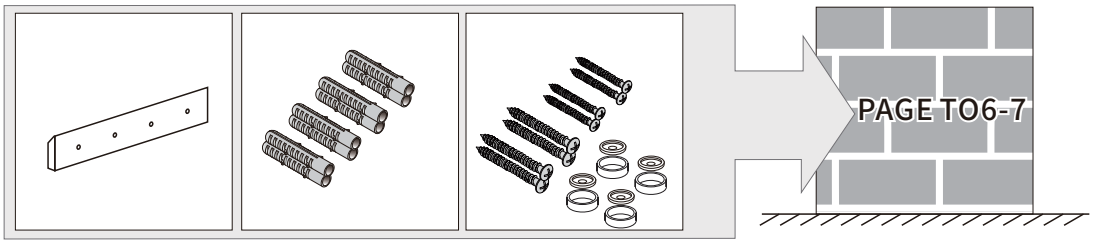

Φ8X40mm M4X50mm
M4X70mm

H00 (screws go into the wall directly)

Cabinet

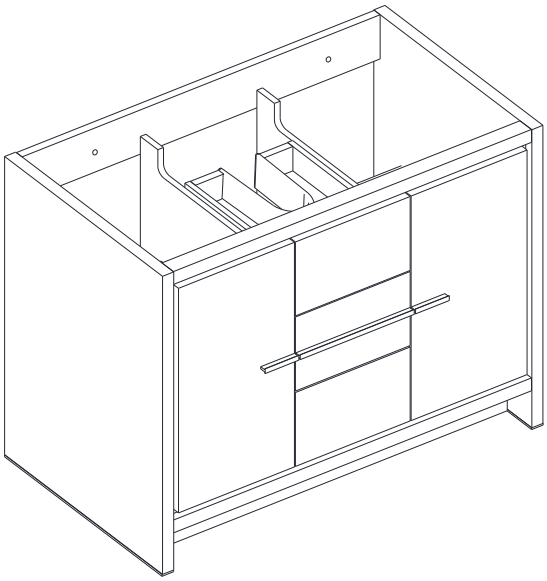

Basin

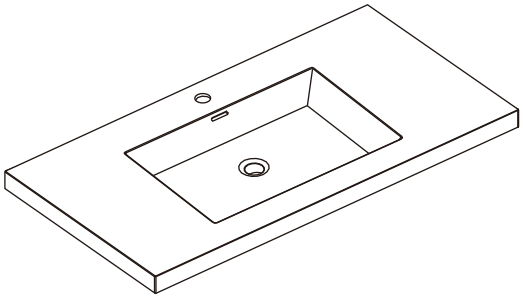

Fixed Accessories

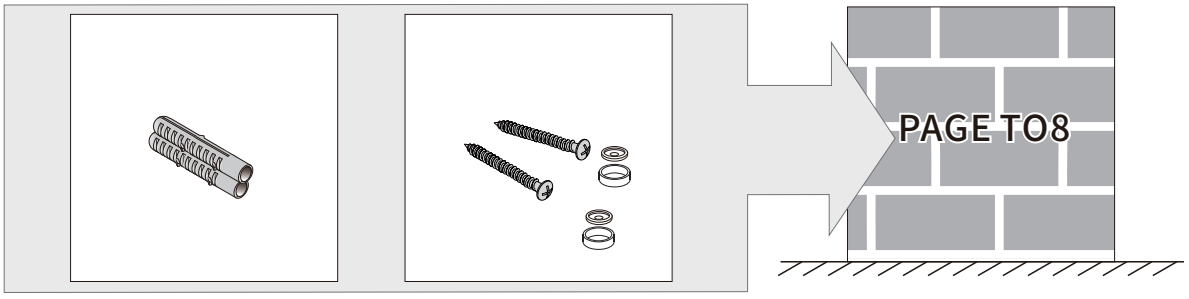

ϕ 8X40mm

M4X50mm

H90 (hanger)

Metal box

1

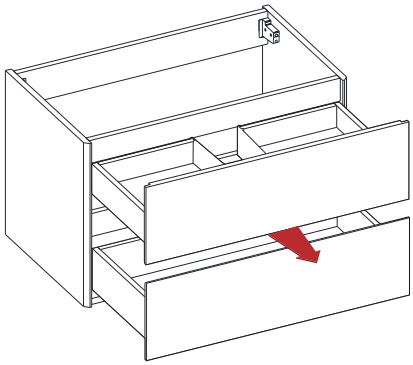

2

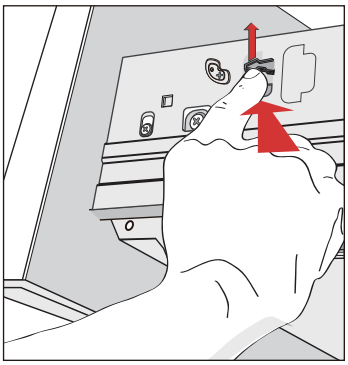

3

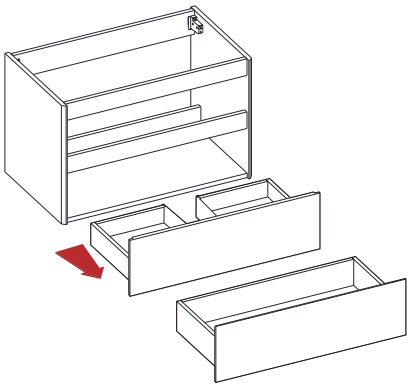

4

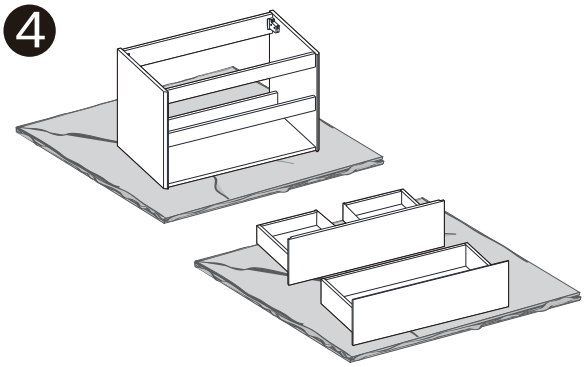

Wooden drawer

1

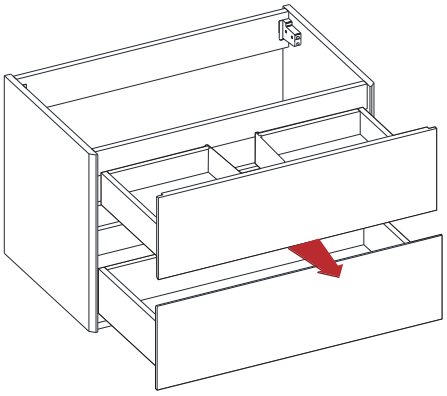

2

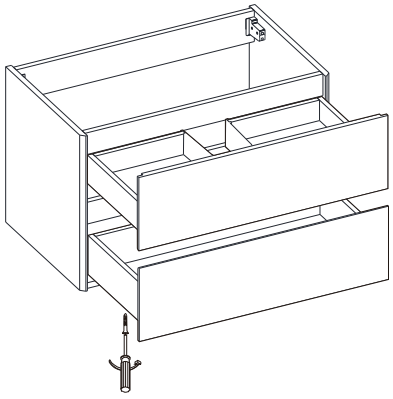

3

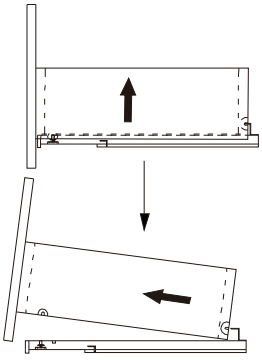

4

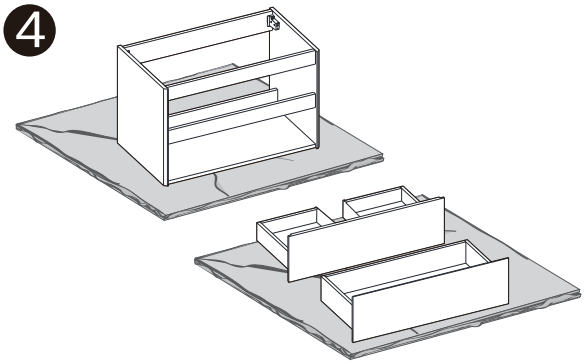

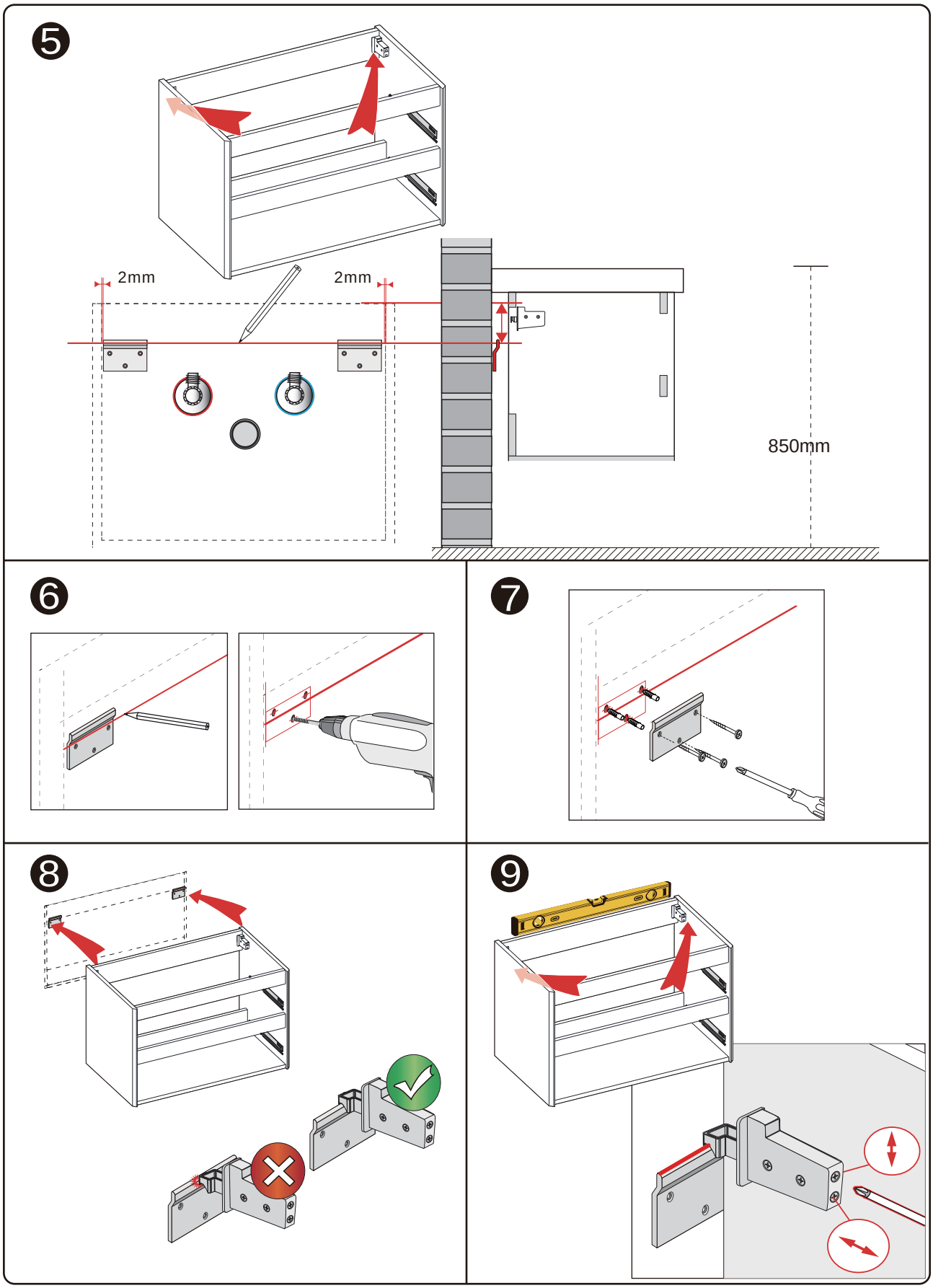
5
2mm
2mm
850mm
6
7
8
9

H45 (oblique cut hanger)

Metal box

1

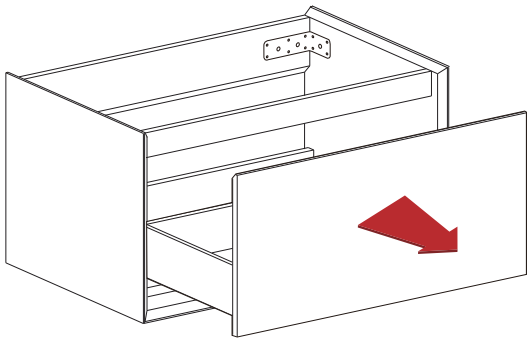

2

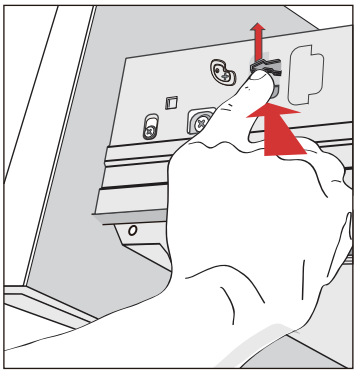

3

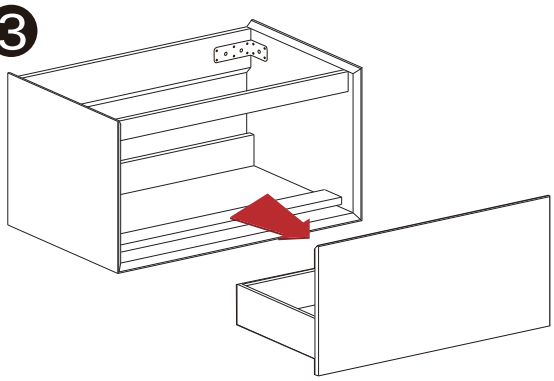

4

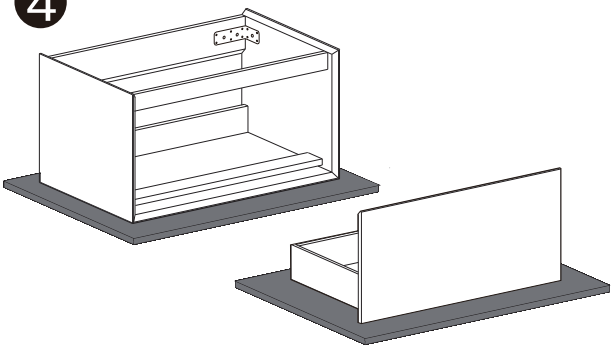

Wooden drawer

1

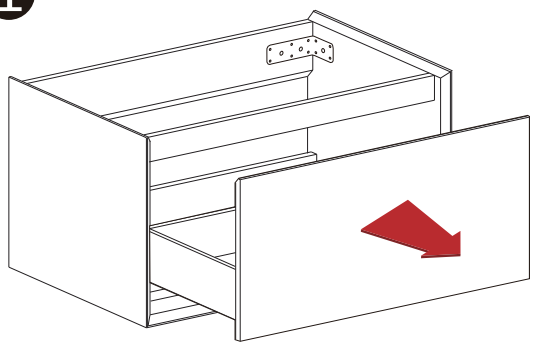

2

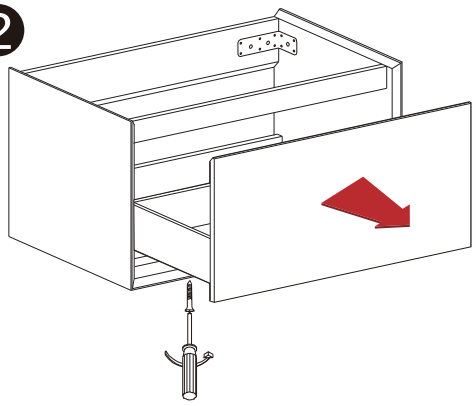

3

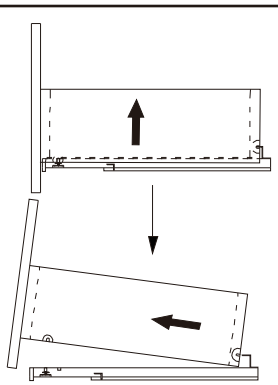

4

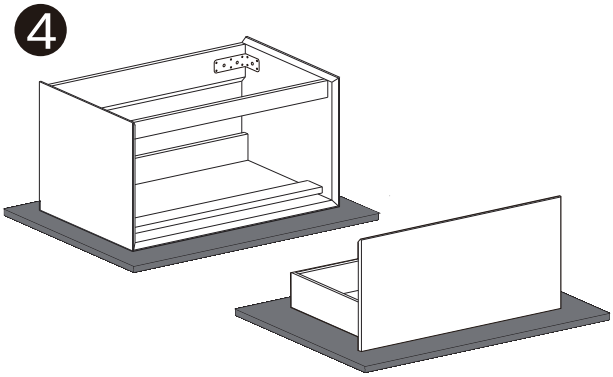

1

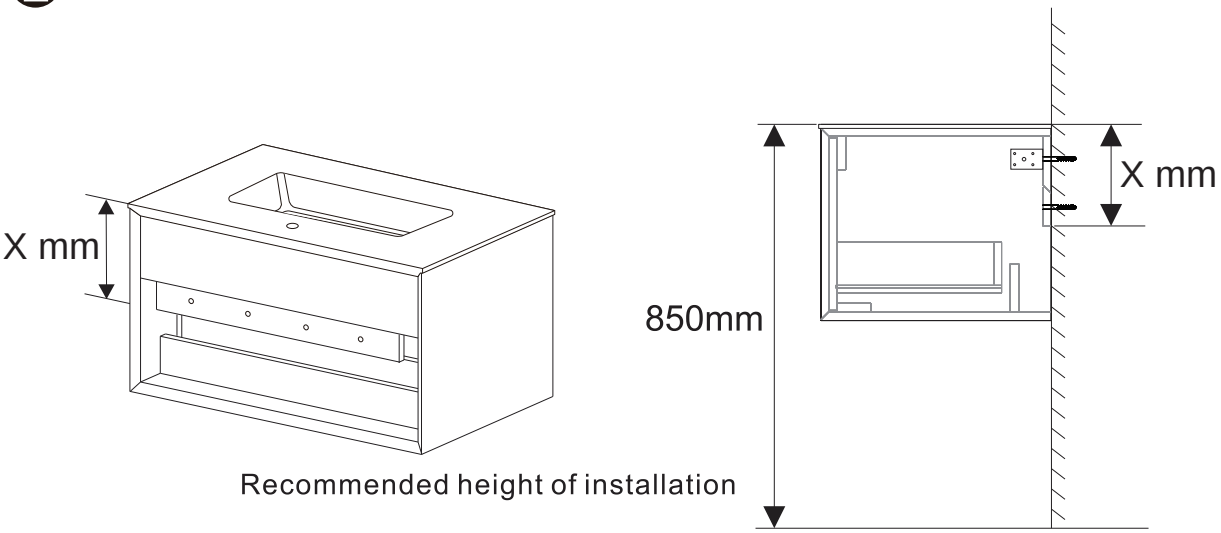
X mm
X mm
850mm
Recommended height of installation

2

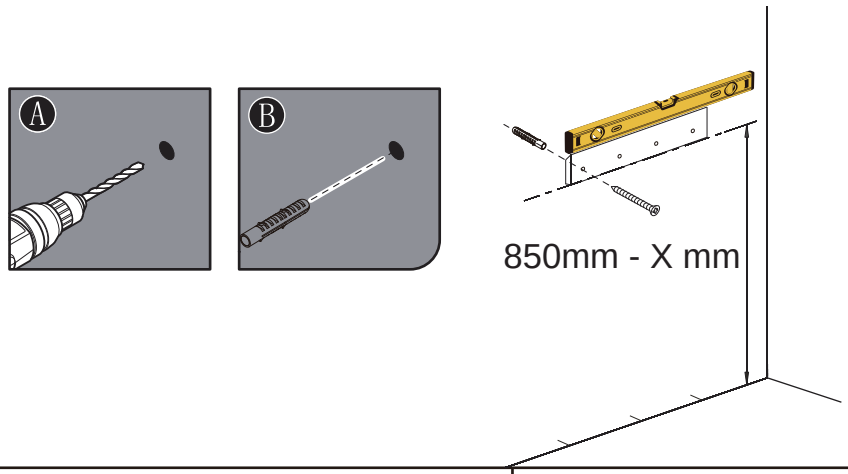
A
B
850mm - X mm

3

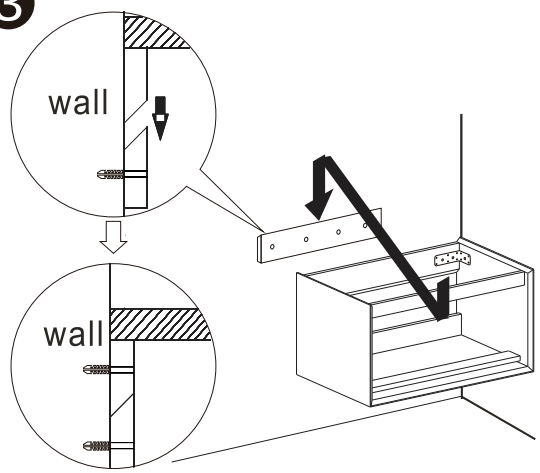
wall
wall

4

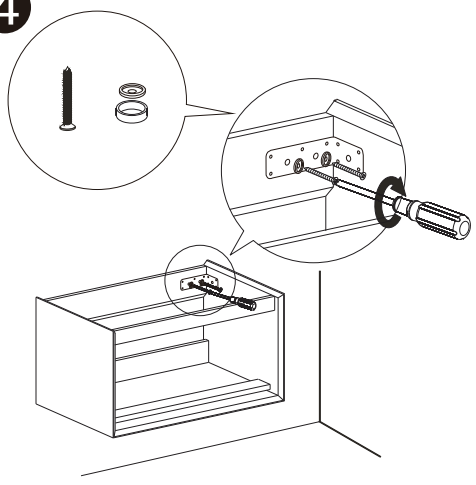

H00 (screws go into the wall directly)

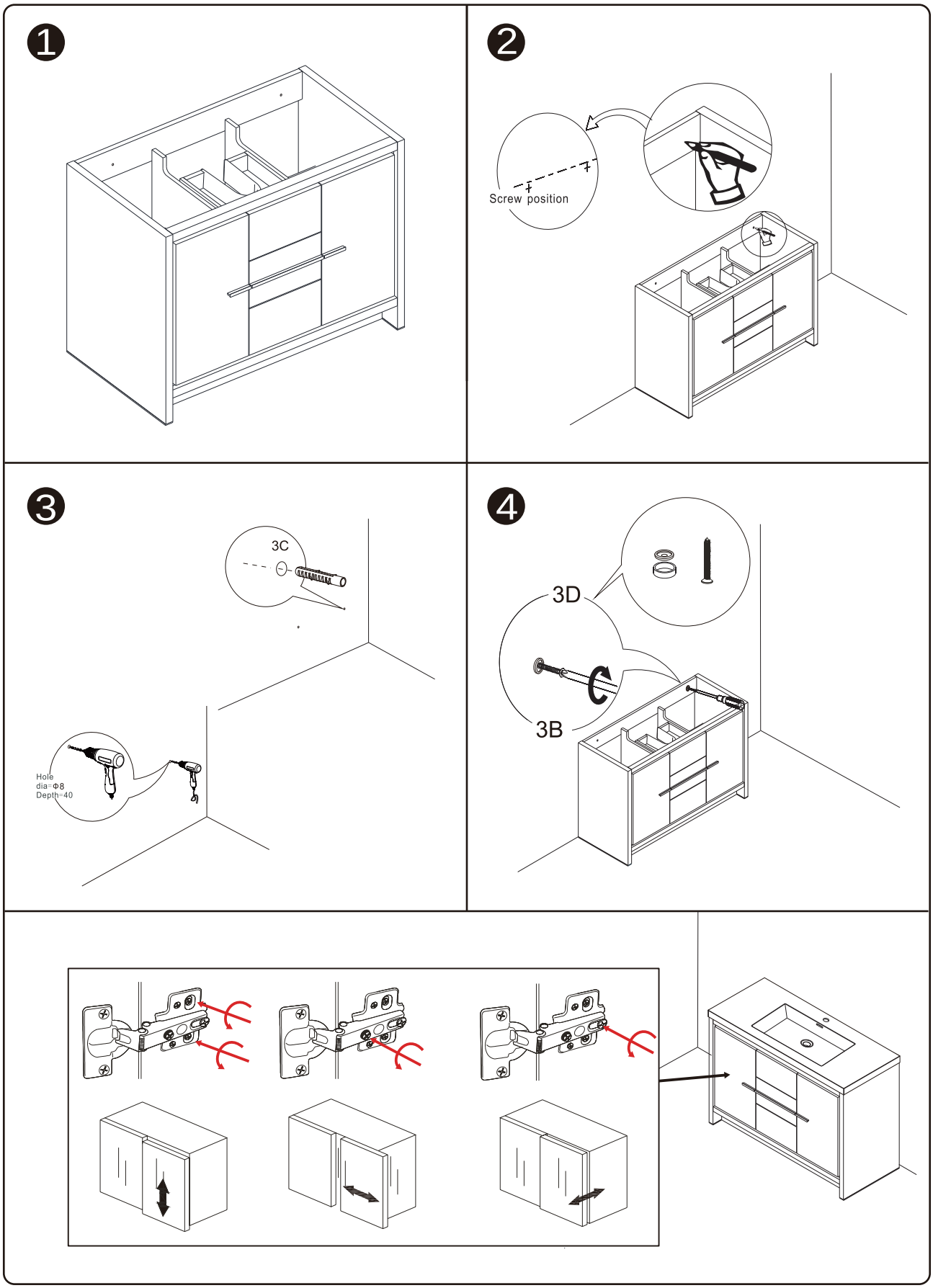

BASIN INSTALLATION

1

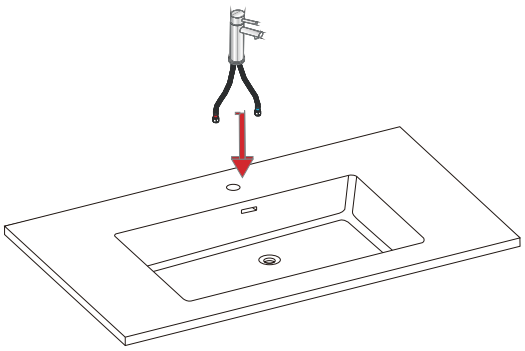

2

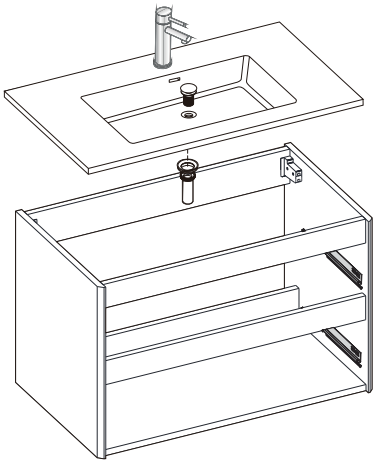

3

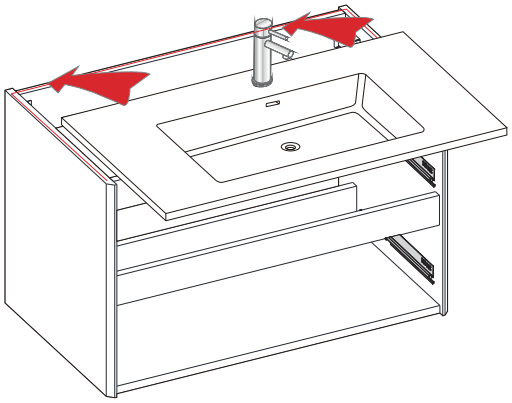

4

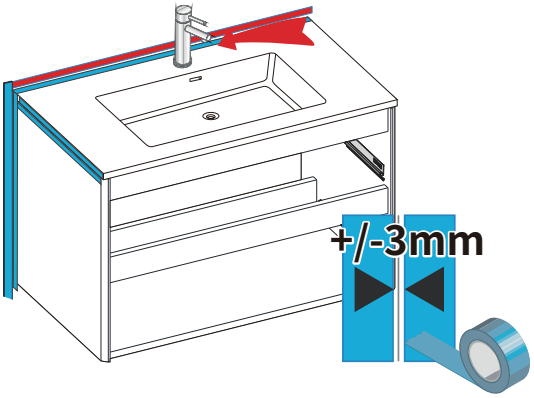

5

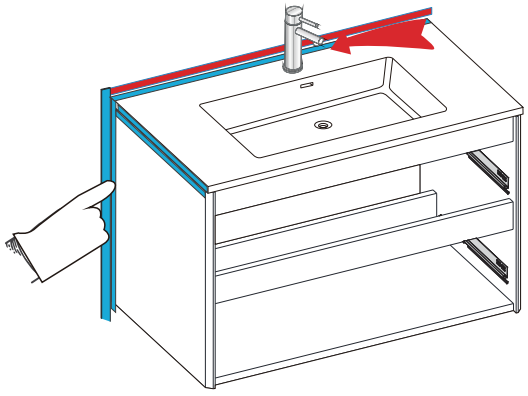

6

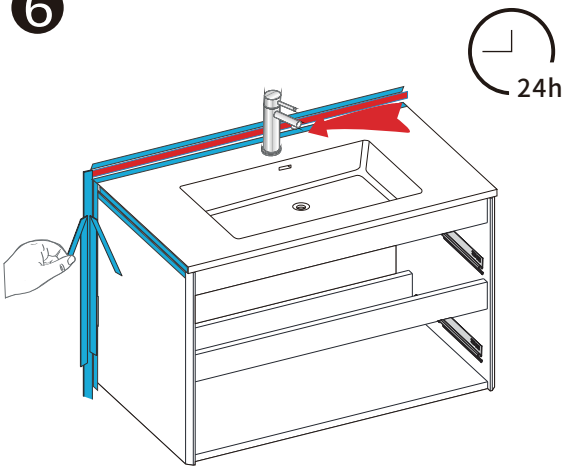

INSTALLATION & ADJUSTMENT OF DRAWER

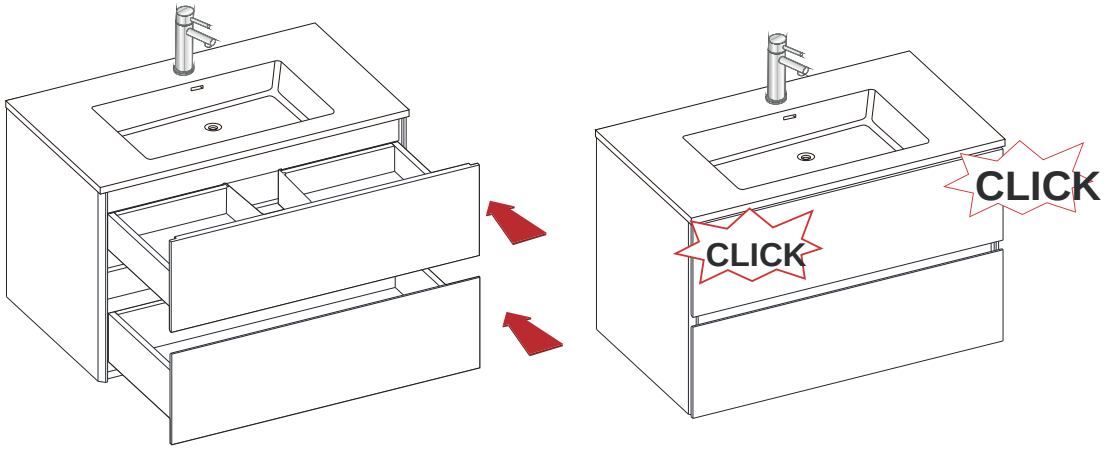

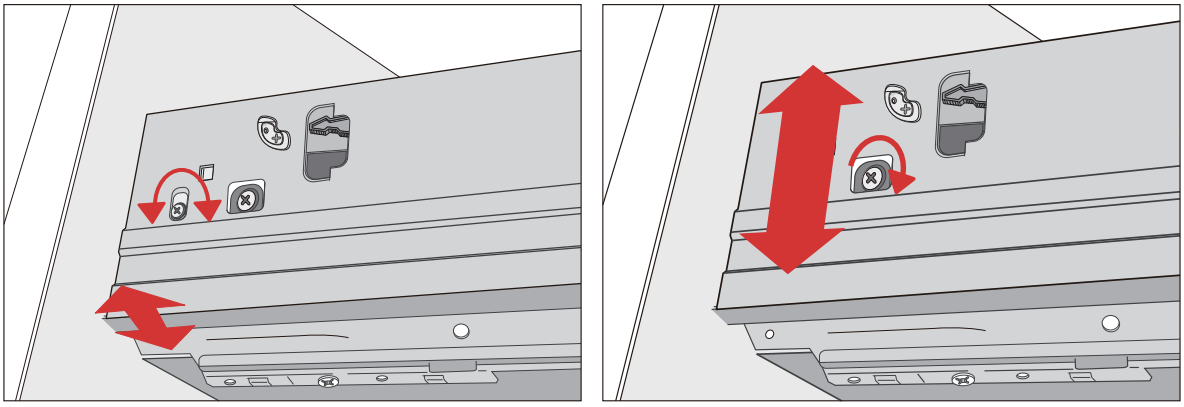

Metal box

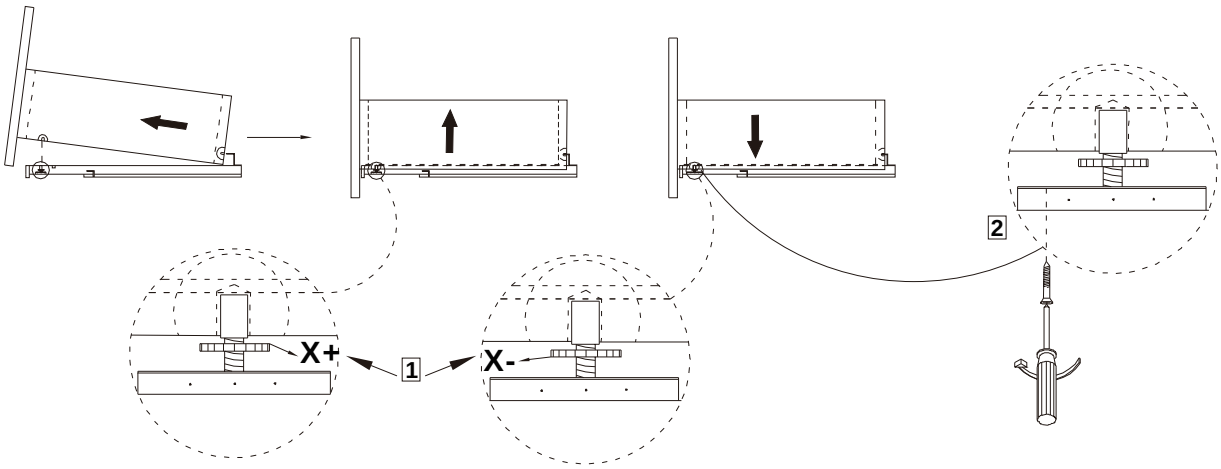

Wooden drawer

THE WAY TO TAKE OFF THE DRAWER

1

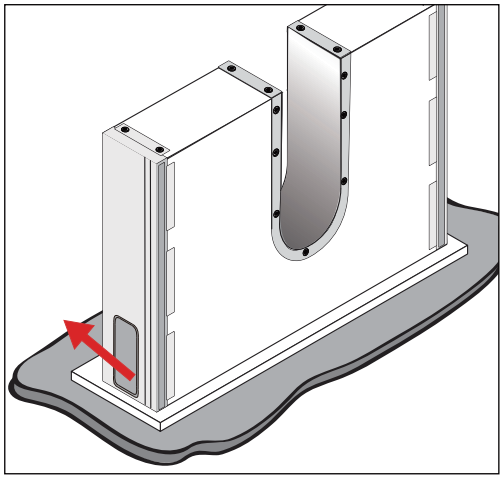

2

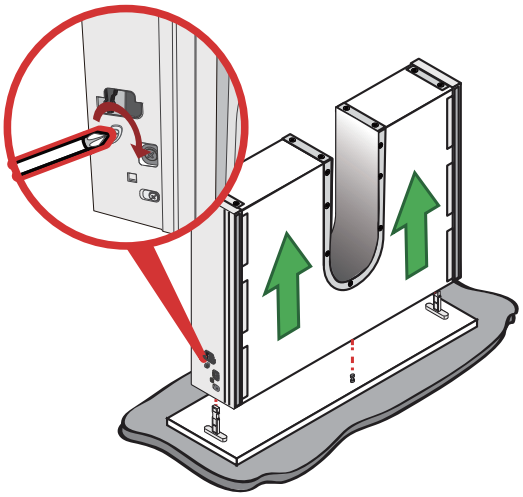

Metal box

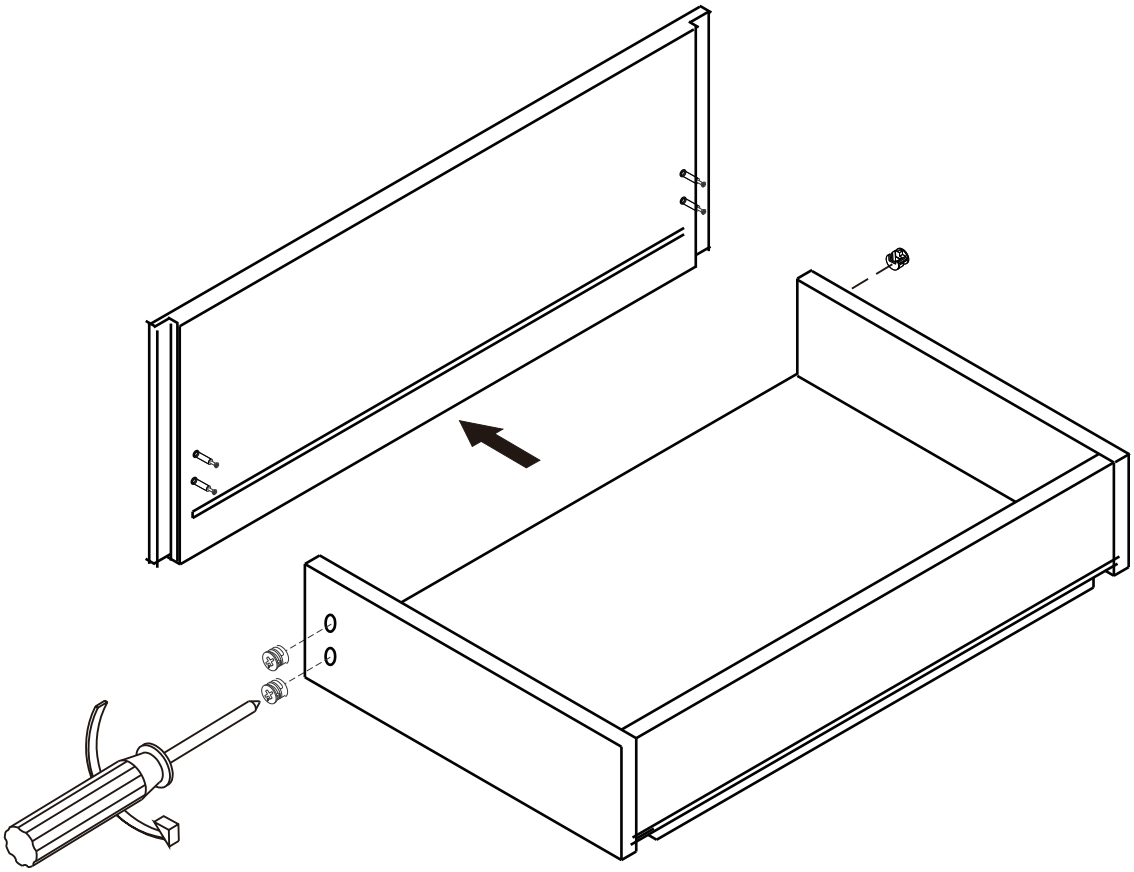

Wooden drawer

KEEP CABINET AWAY FROM WATER, which will cause deformation and damage.

CAUTION



DO NOT put lit cigarettes on the counter or basin, which will cause discoloration.

CAUTION



DO NOT pour acid or alkaline solutions into the basin, which will cause discoloration, leak or damage.

CAUTION



AVOID DIRECT SUNLIGHT, which may cause deformation and discoloration.

CAUTION



AVOID HEAT, which will cause deformation and discoloration.

CAUTION

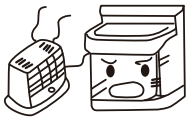

DO NOT pour hot water into the basin, which may cause damage.

CAUTION



AVOID nylon brush, toilet cleaner or hydrochloric acid cleaner, which will cause damage

CAUTION



AVOID dropping hard objects into the basin, which may cause damage.

CAUTION



To extend the life of the product, please do the maintenance work every day. The following maintenance methods are for reference only.

- Please dry the cabinet immediately with clean, soft cloth when it encounters water.
- When the product is stained with dirt, wipe the cabinets clean with a soft, damp cloth, apply some cleaners, and dry immediately with another clean, soft cloth.
- The water supply pipes, the drainage pipes, and the connection parts are prone to water leakage under different circumstances. Please check these parts regularly to avoid accidents due to water leakage.
- After the product is used for a period of time, dirt will remain on the drain plug, which will affect drainage, so the plug needs to be cleaned regularly.