SERA BATHROOM DESIGNS

72-ROAK-PA-NFIO-WT-PKG

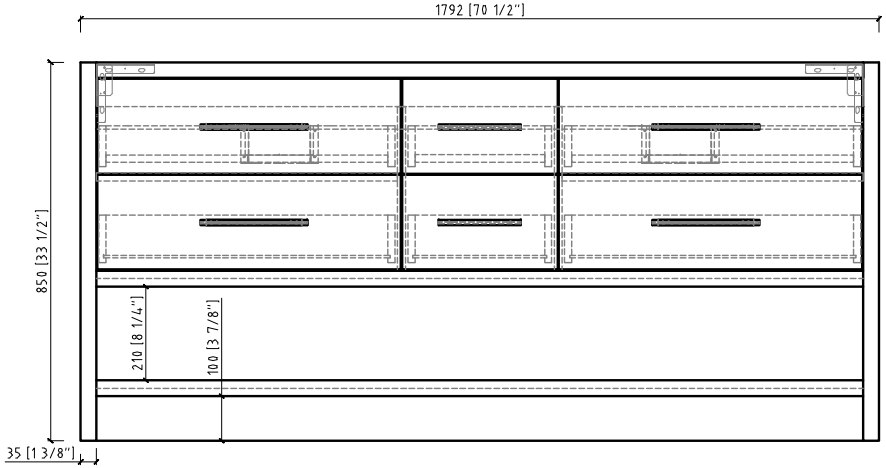

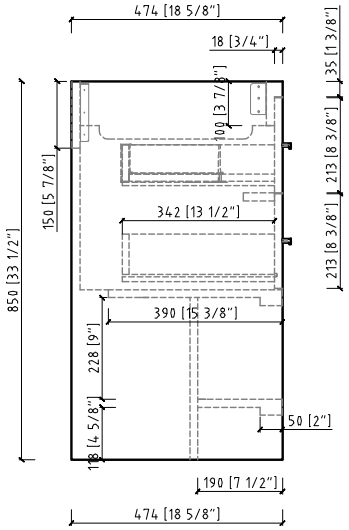

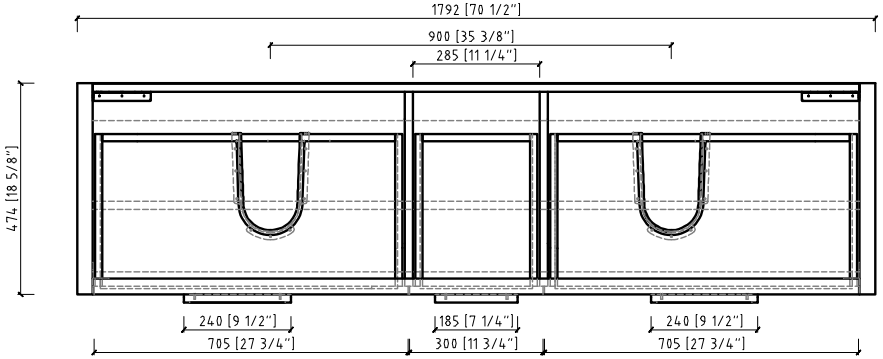

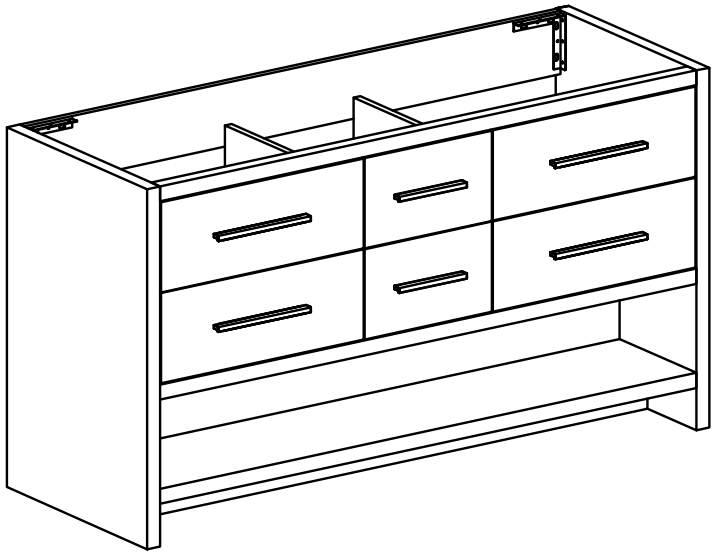

SERA BATHROOM DESIGNS
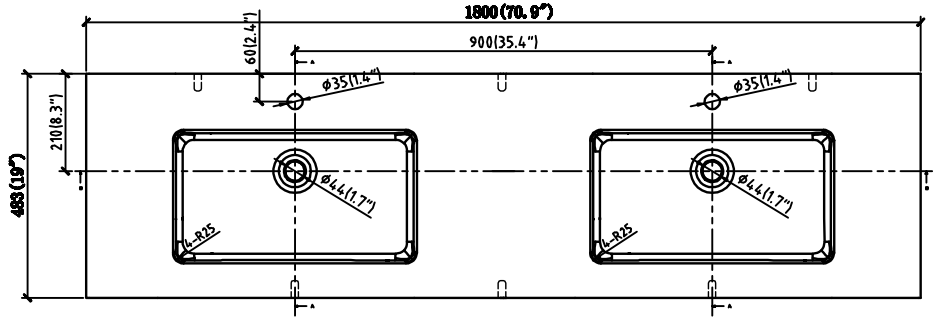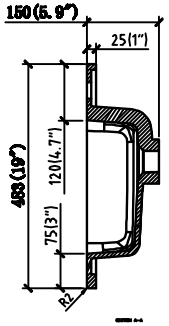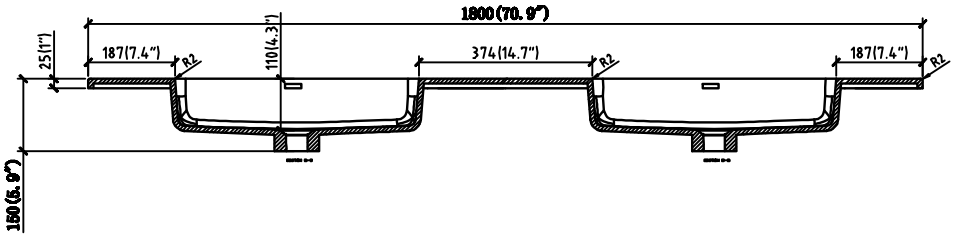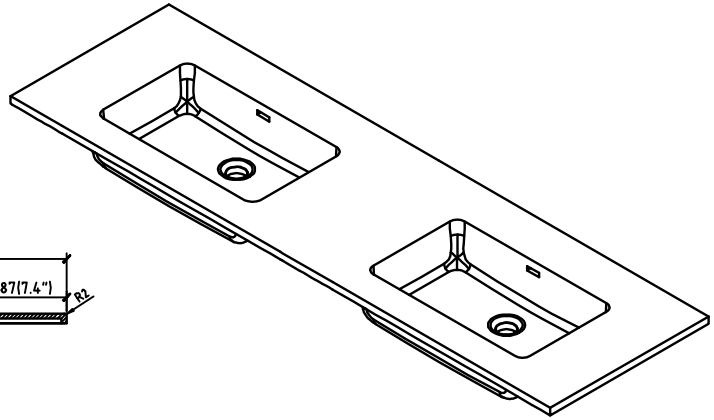
72-ROAK-PA-NFIO-WT-PKG