SERA BATHROOM DESIGNS

60-WT-CMB-CML-EWM

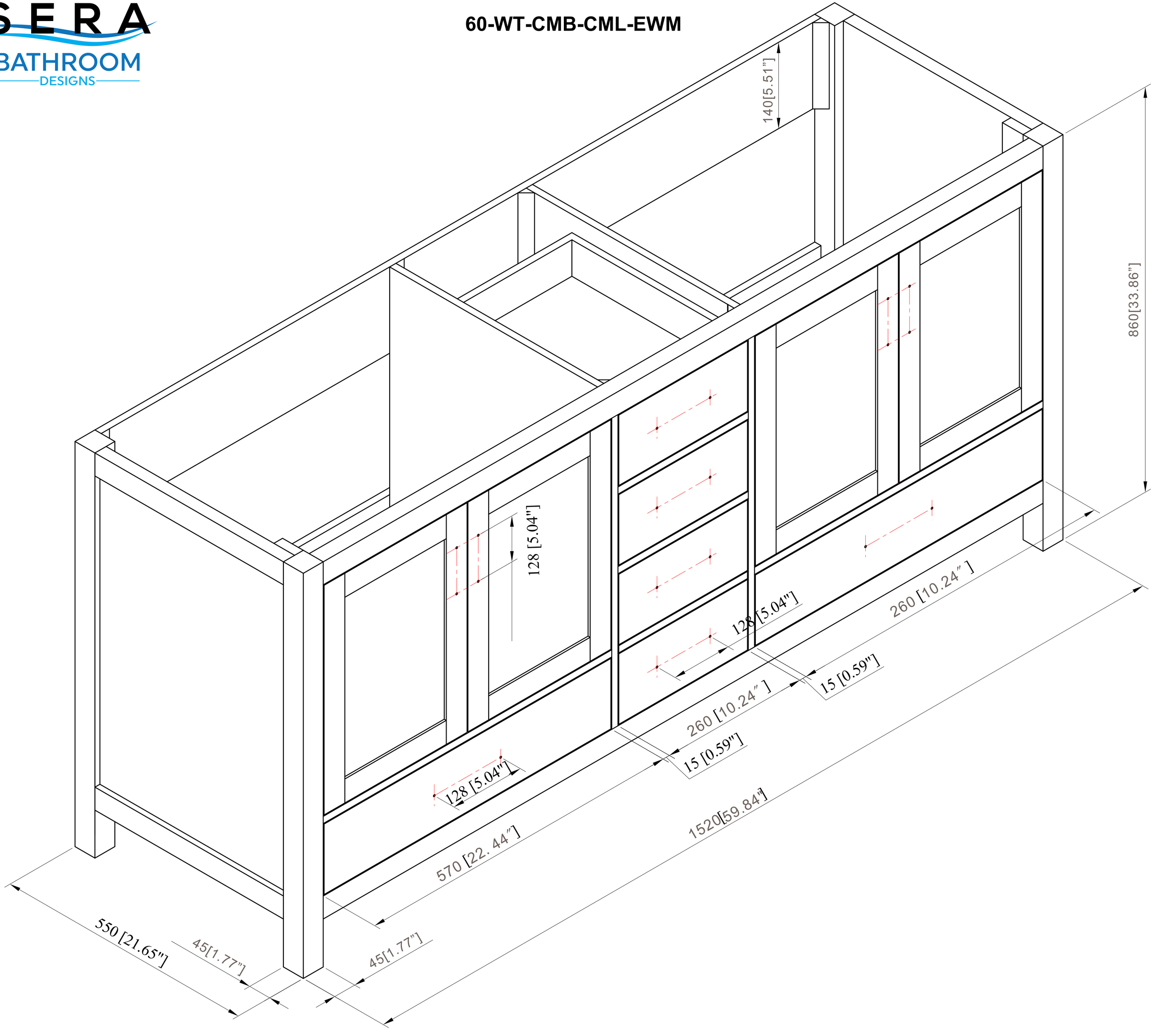

SERA BATHROOM DESIGNS
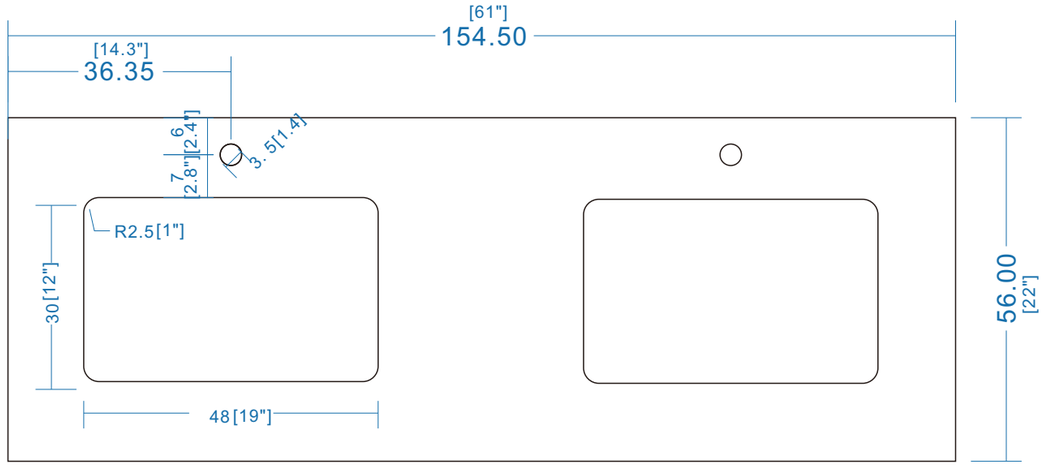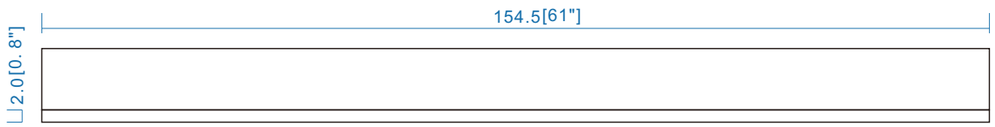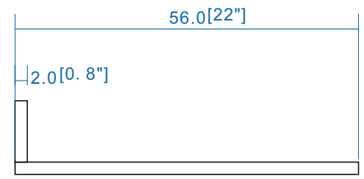
60-WT-CMB-CML-EWM