SERA BATHROOM DESIGNS

60-WT-CMB-CML-ECM

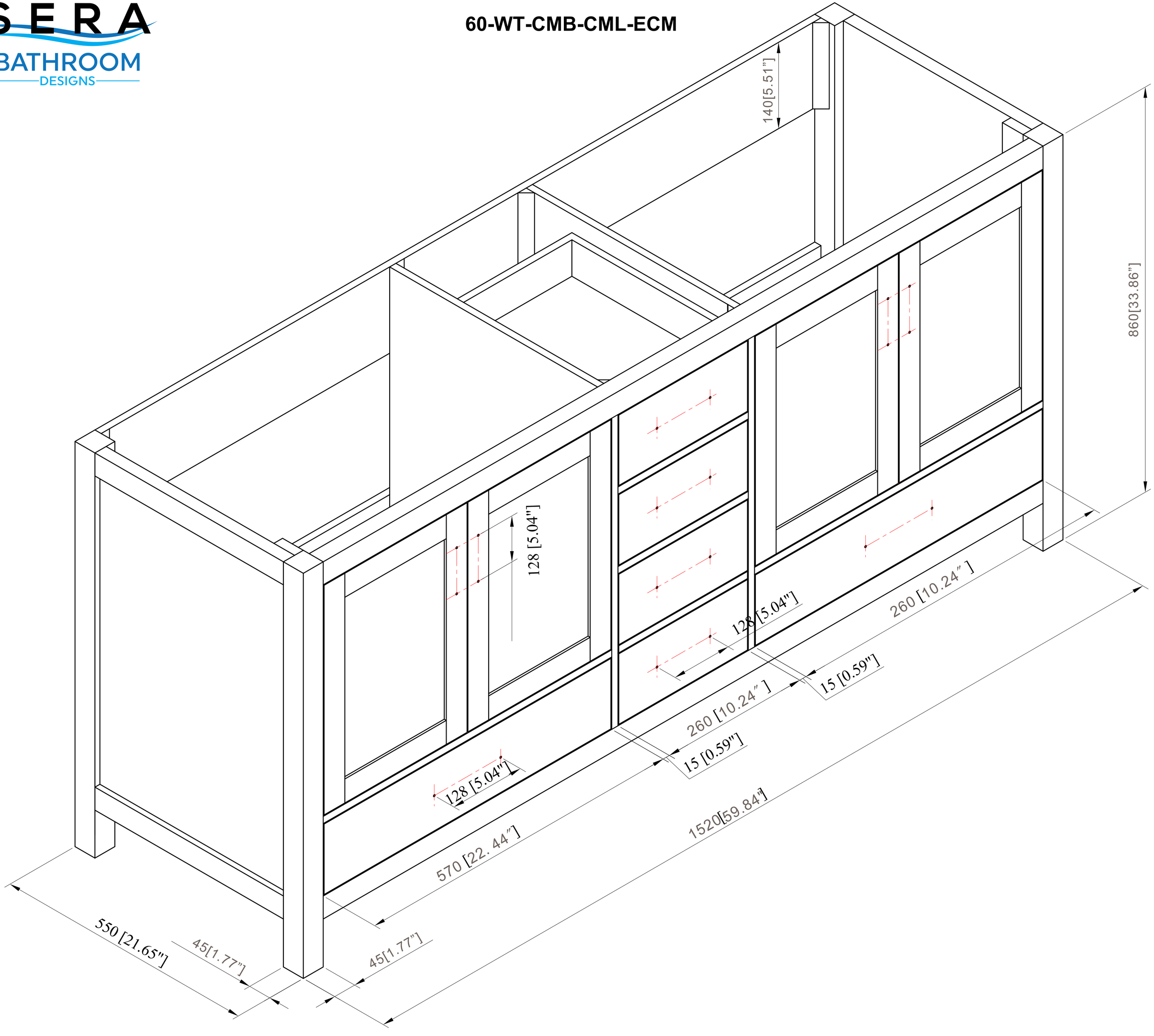

SERA BATHROOM DESIGNS
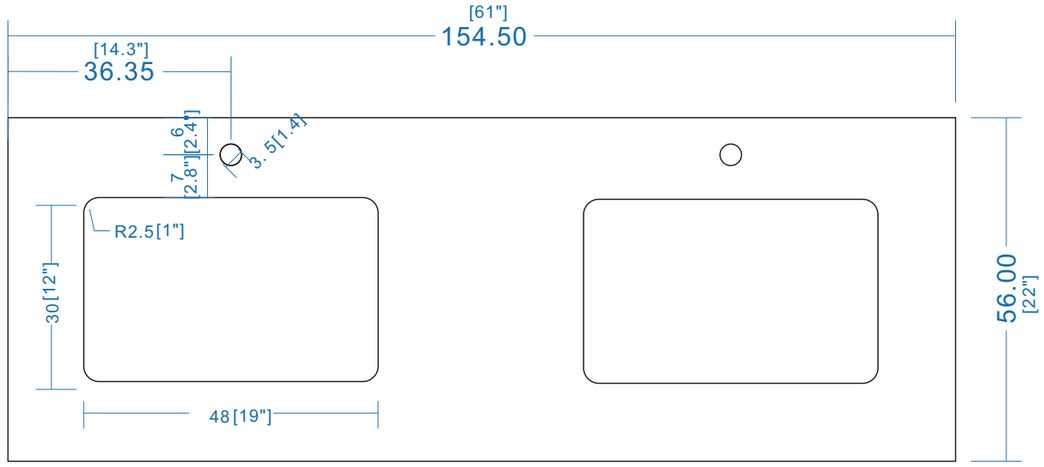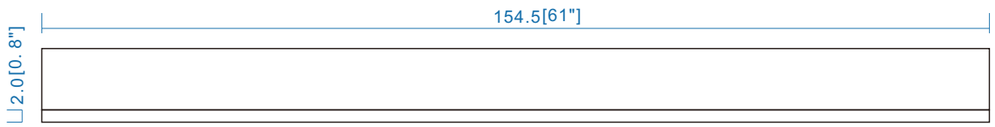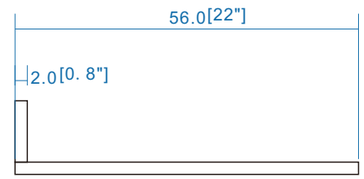
60-WT-CMB-CML-ECM