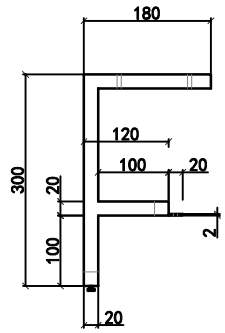

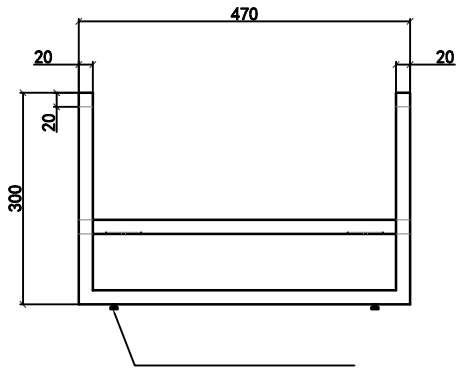

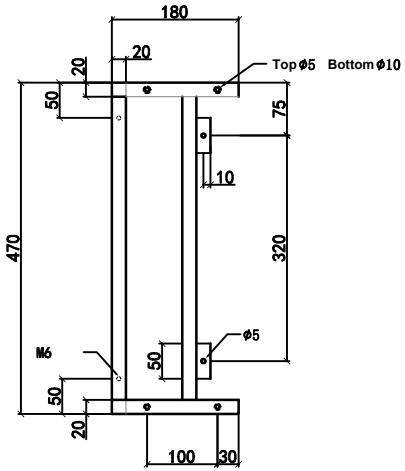

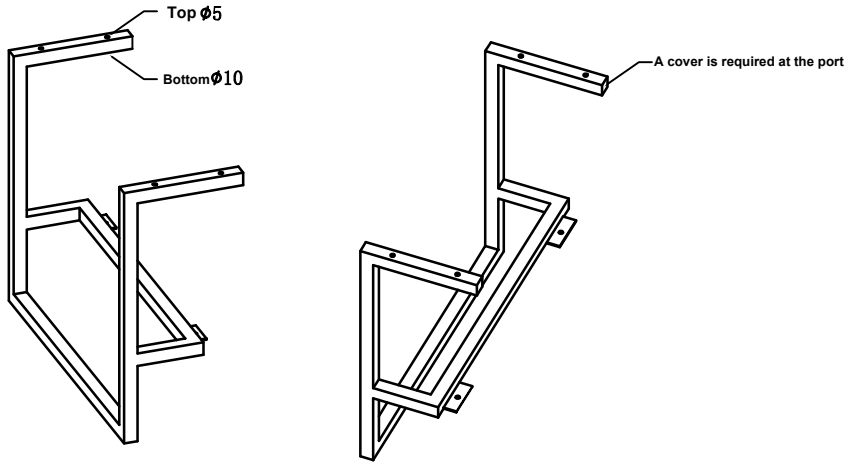

Technological requirement:

1.Material specifications：20mm*20mm*1mm.
2.No tolerances stated±0.5，Unnoted chamfer R1.
3.No false soldering or missing soldering.
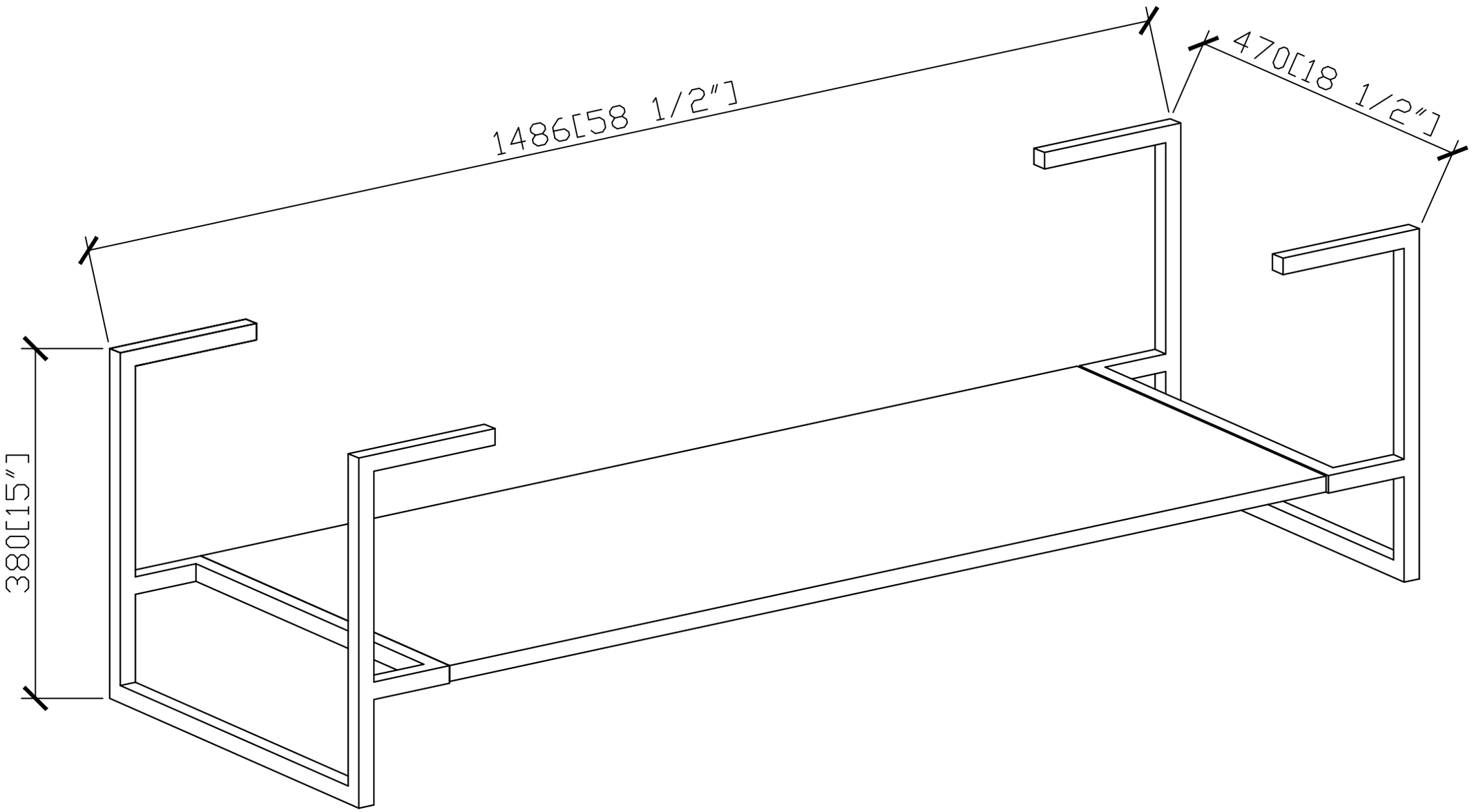
SERA BATHROOM DESIGNS