SERA BATHROOM DESIGNS

60-WAL-CMB-CML-ECM

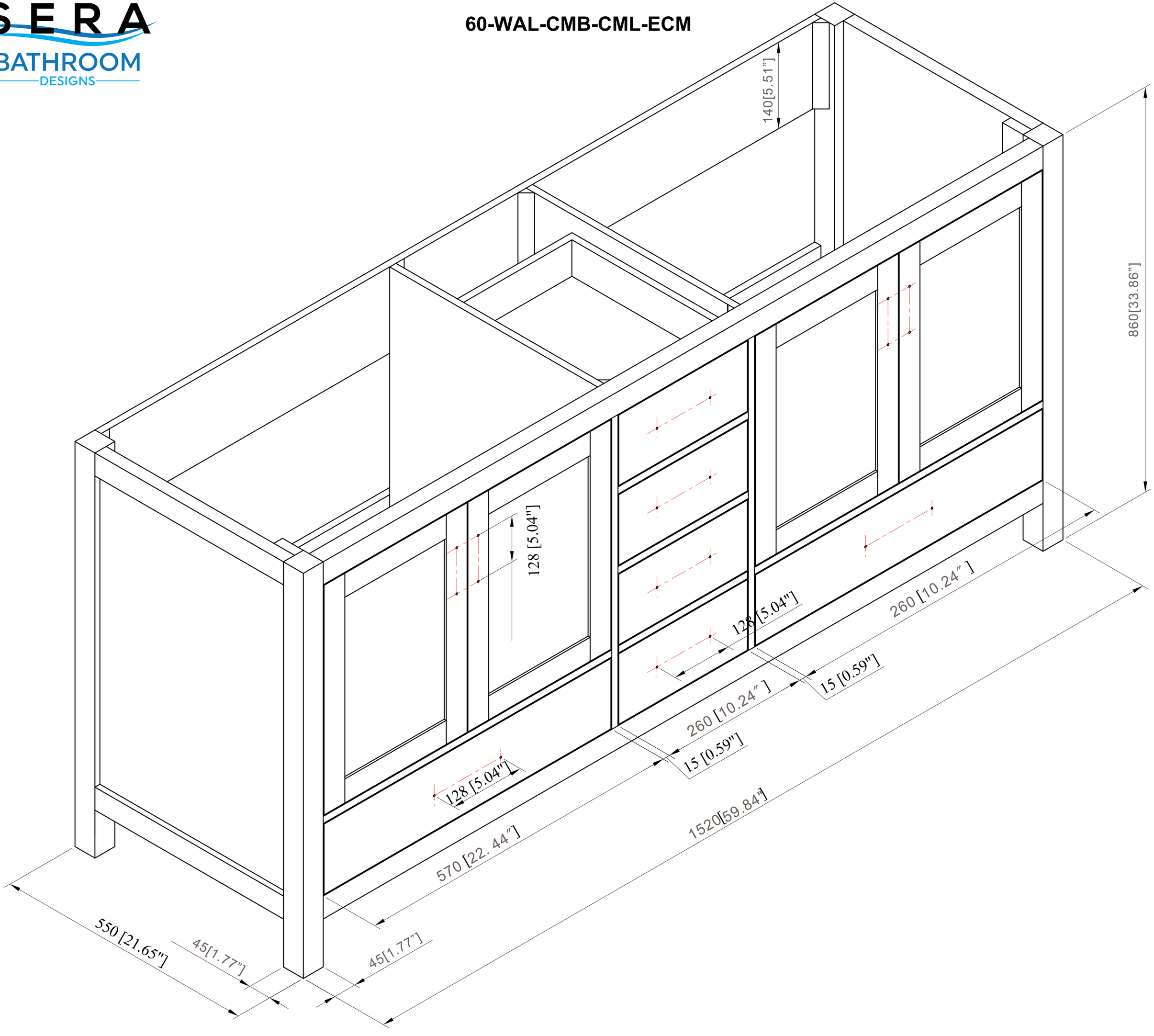

SERA BATHROOM DESIGNS
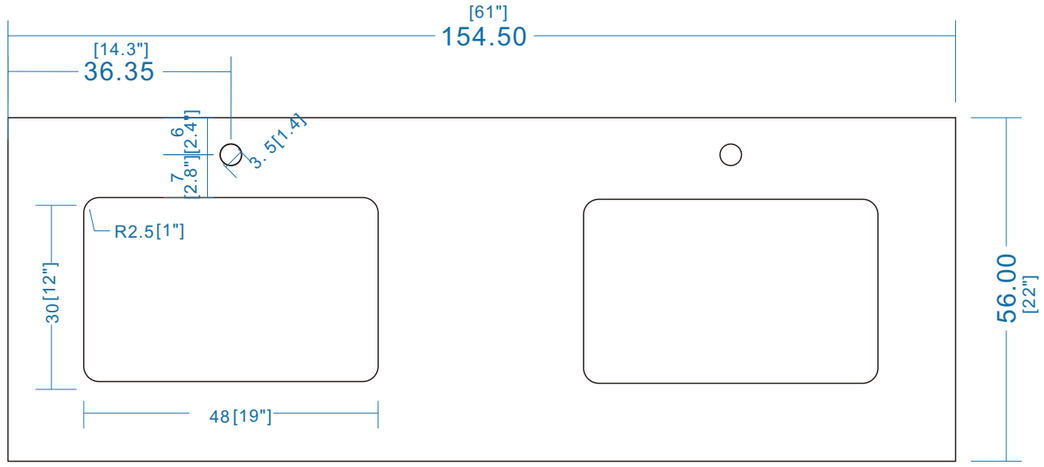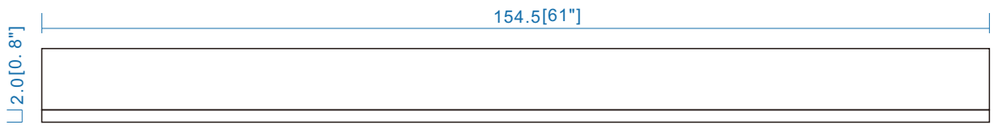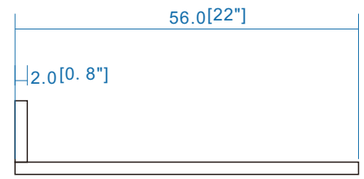
60-WAL-CMB-CML-ECM