SERA BATHROOM DESIGNS

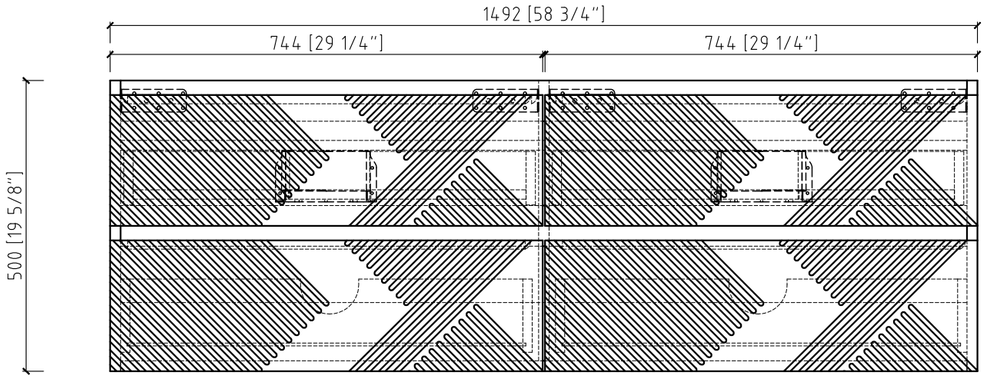

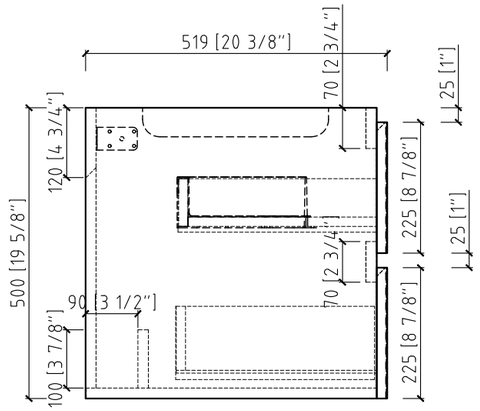

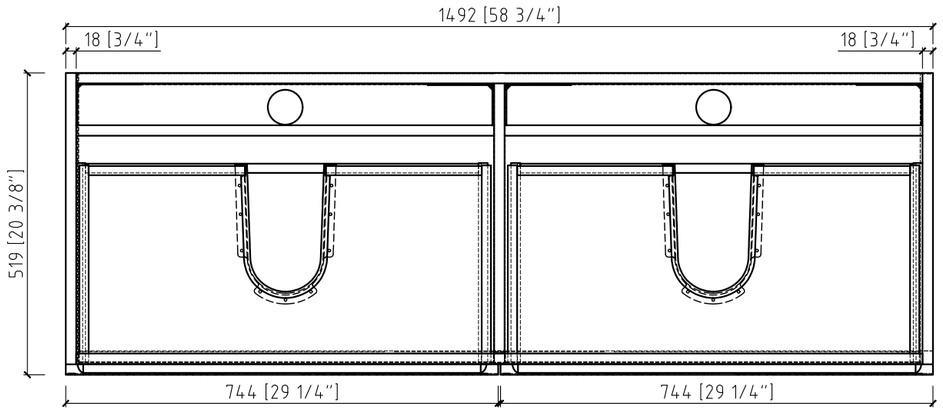

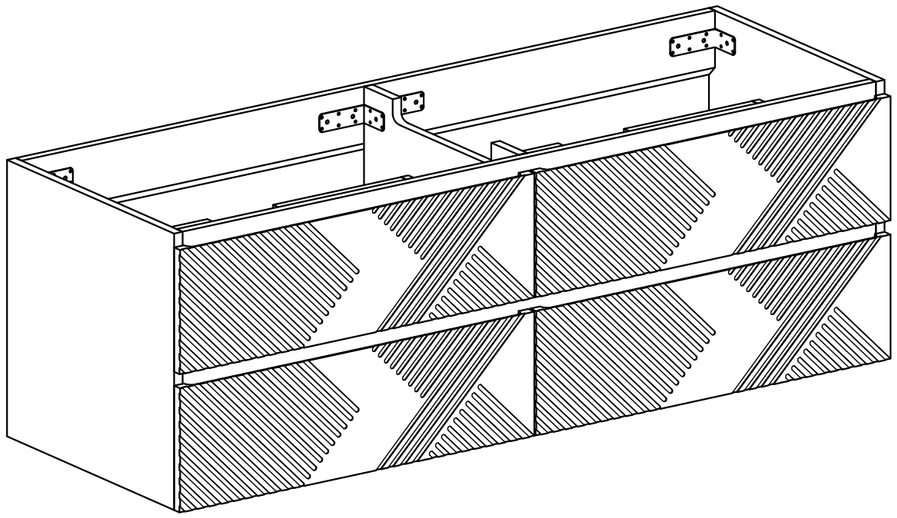

2023-03-06
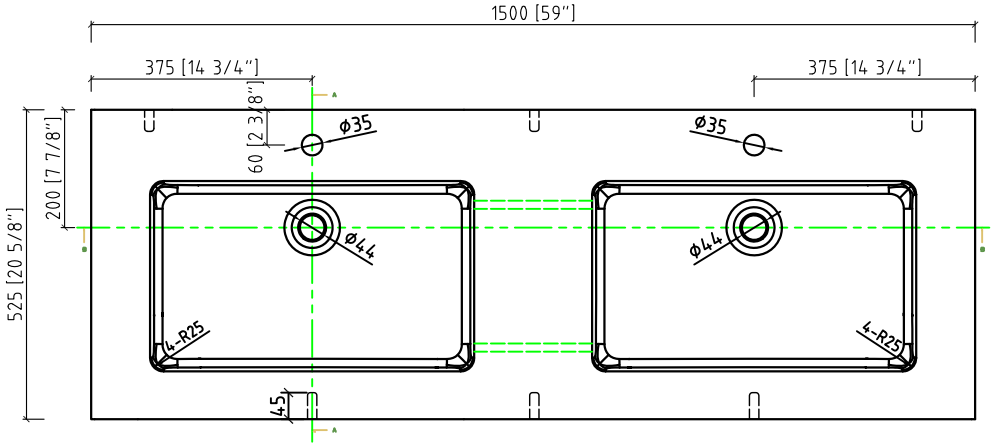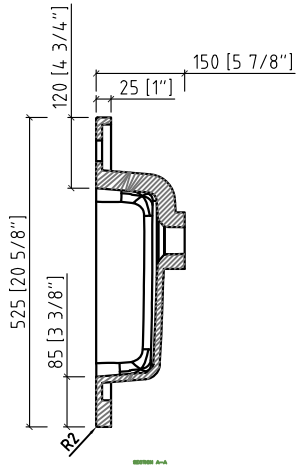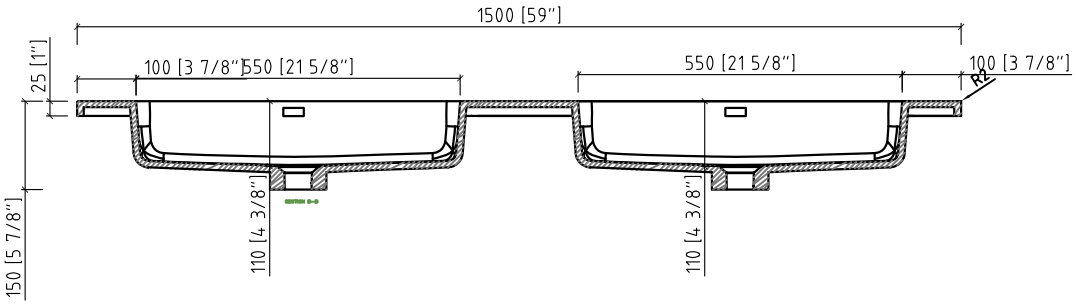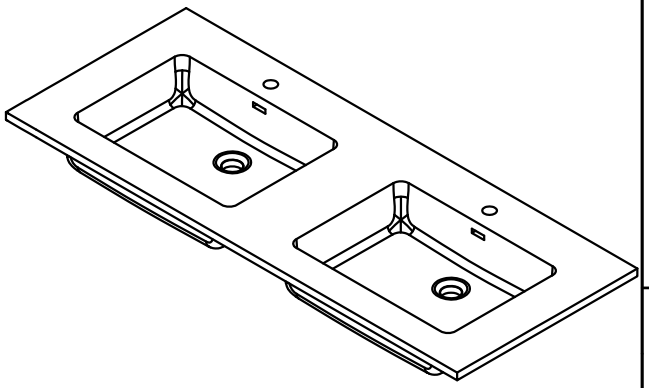
SERA BATHROOM DESIGNS