60-HNT-PA-SNR-TPE-PKG

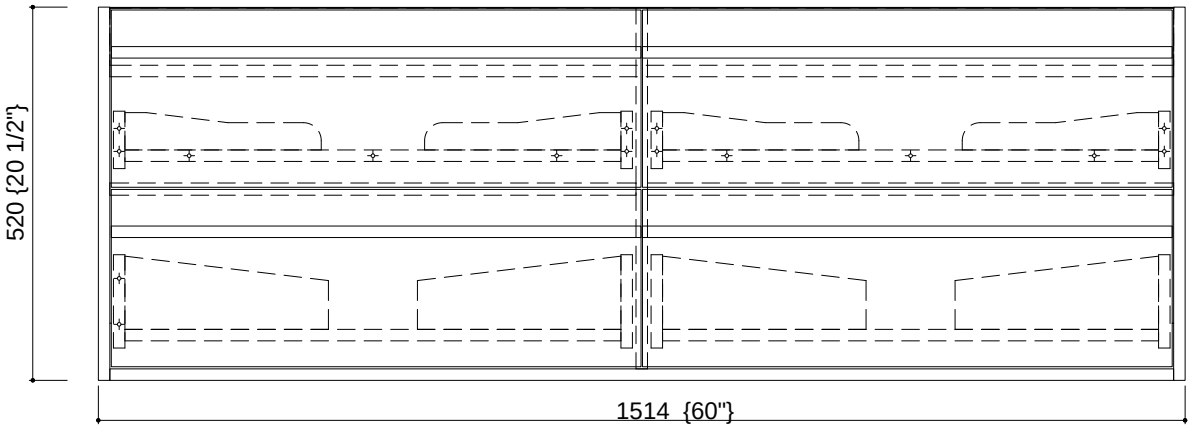

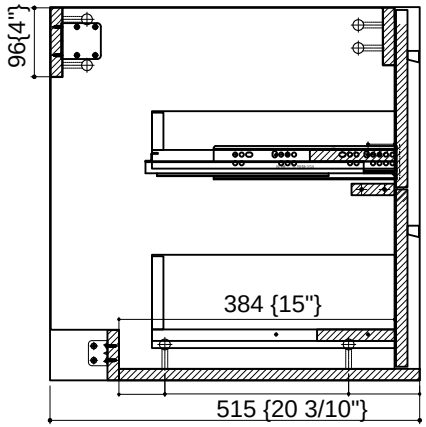

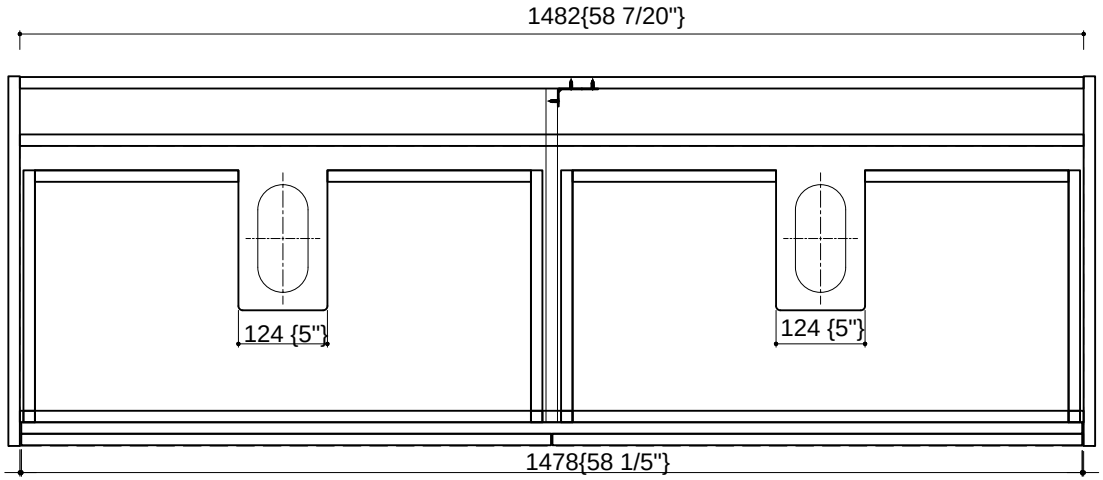

60-HNT-PA-SNR-TPE-PKG

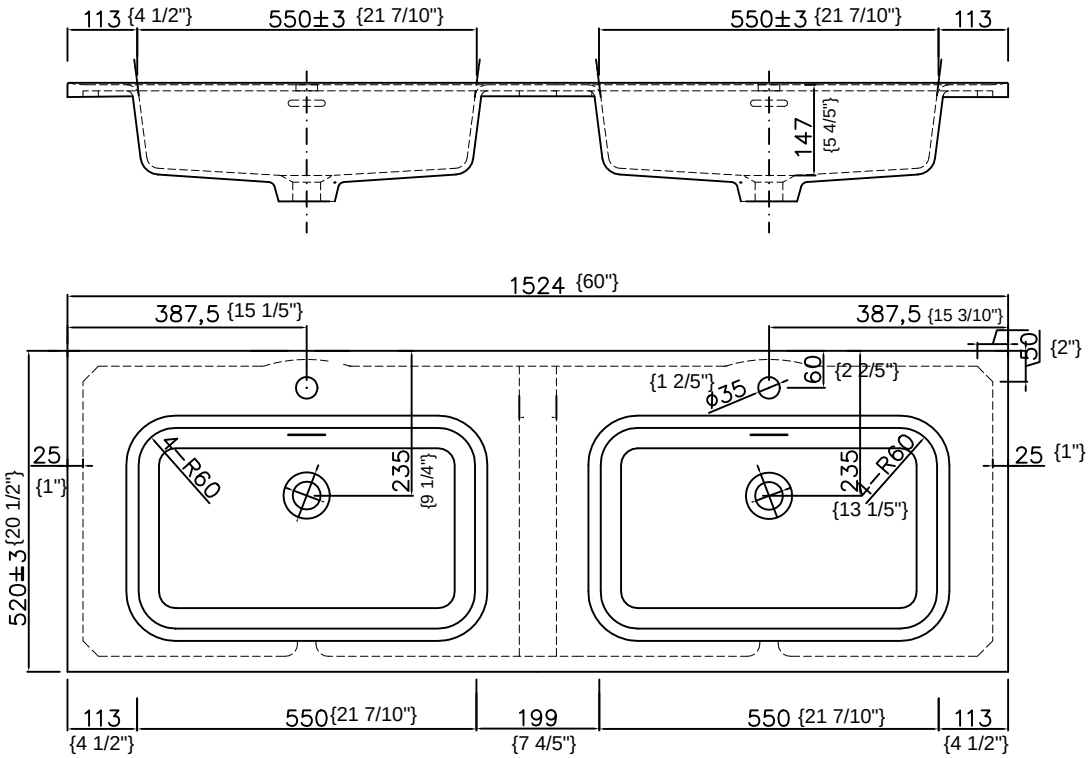

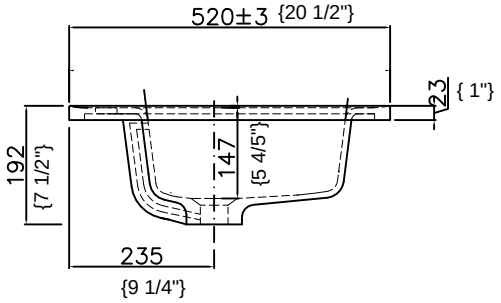

UPC Code:826156608767