SERA BATHROOM DESIGNS

48-WAL-PA-FLE-WT-OS-PKG

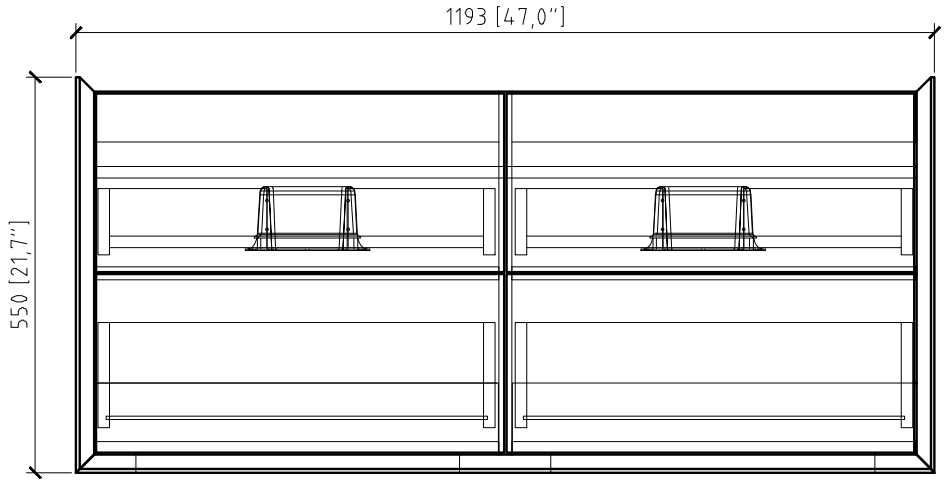

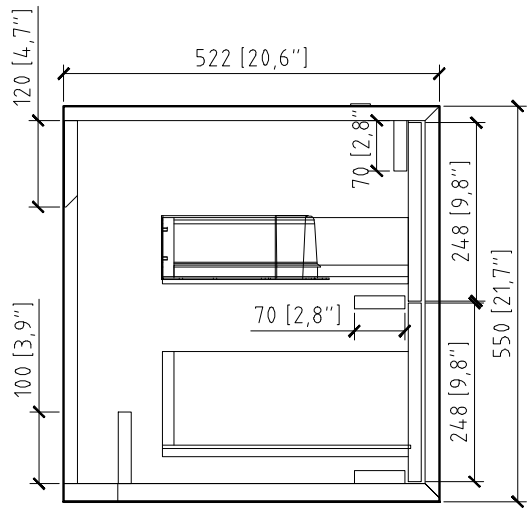

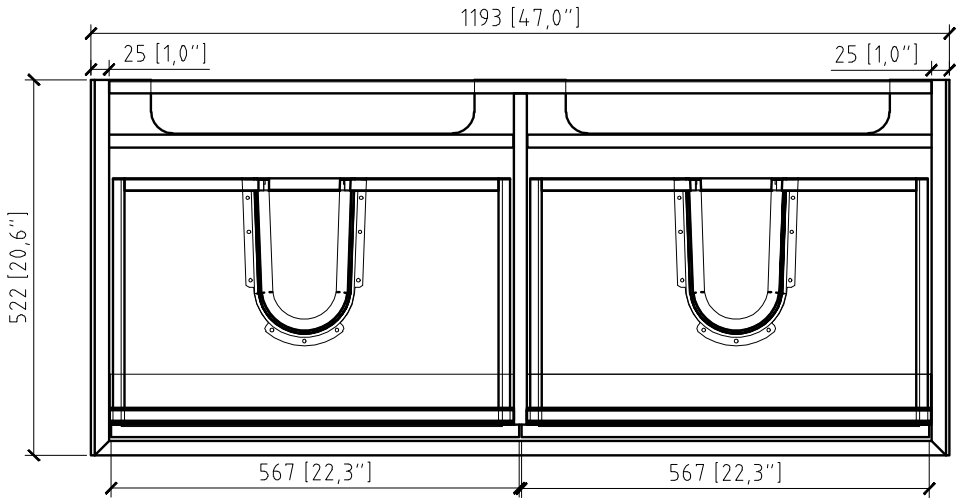

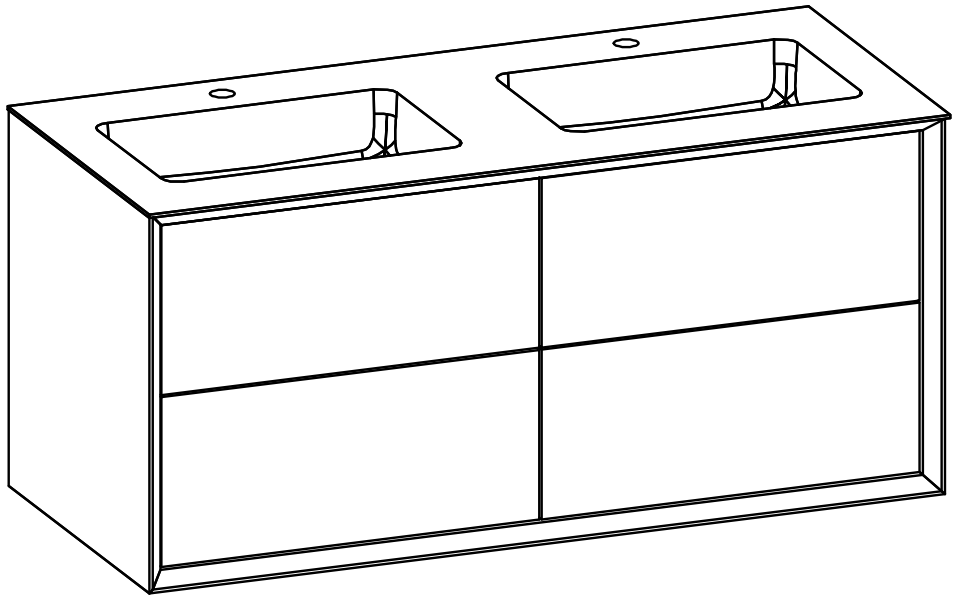

48-WAL-PA-FLE-WT-OS-PKG

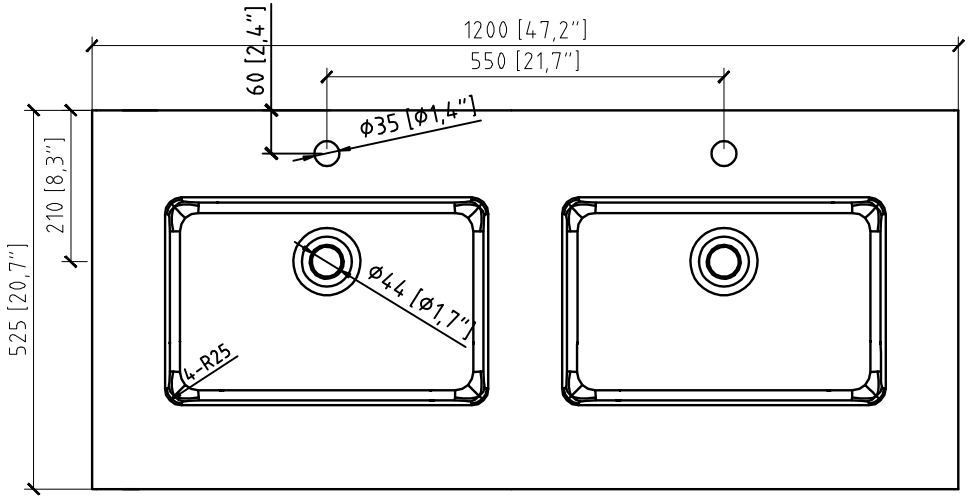

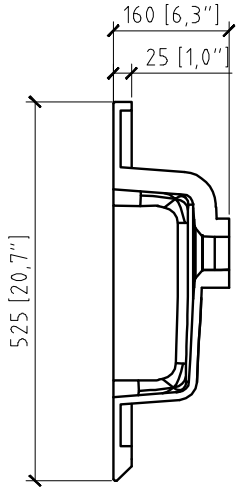

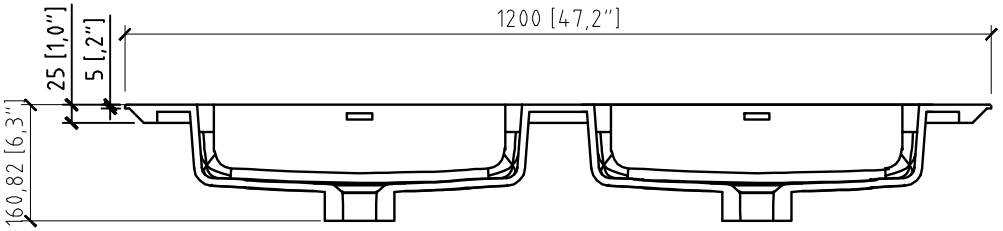

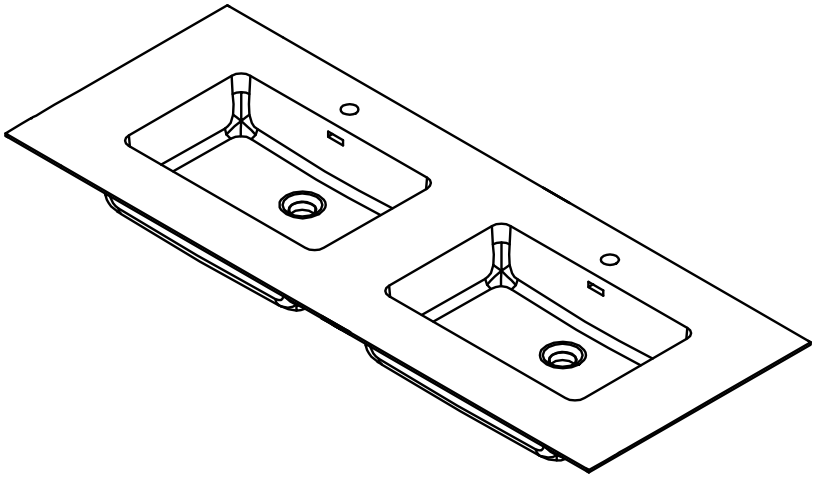

SERA BATHROOM DESIGNS
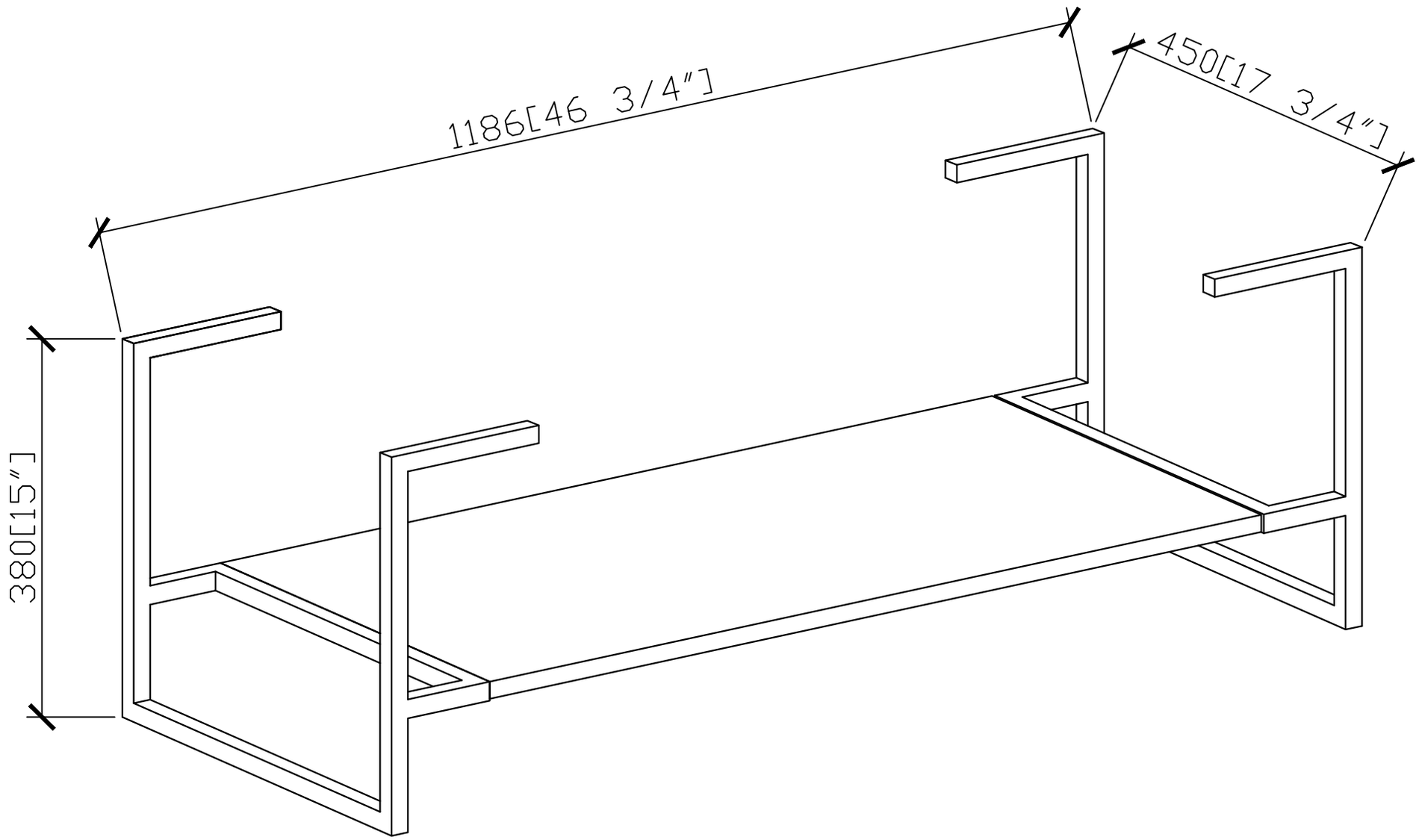
48-WAL-PA-FLE-WT-OS-PKG