SERA BATHROOM DESIGNS

48-WAL-CMB-CML-ECM

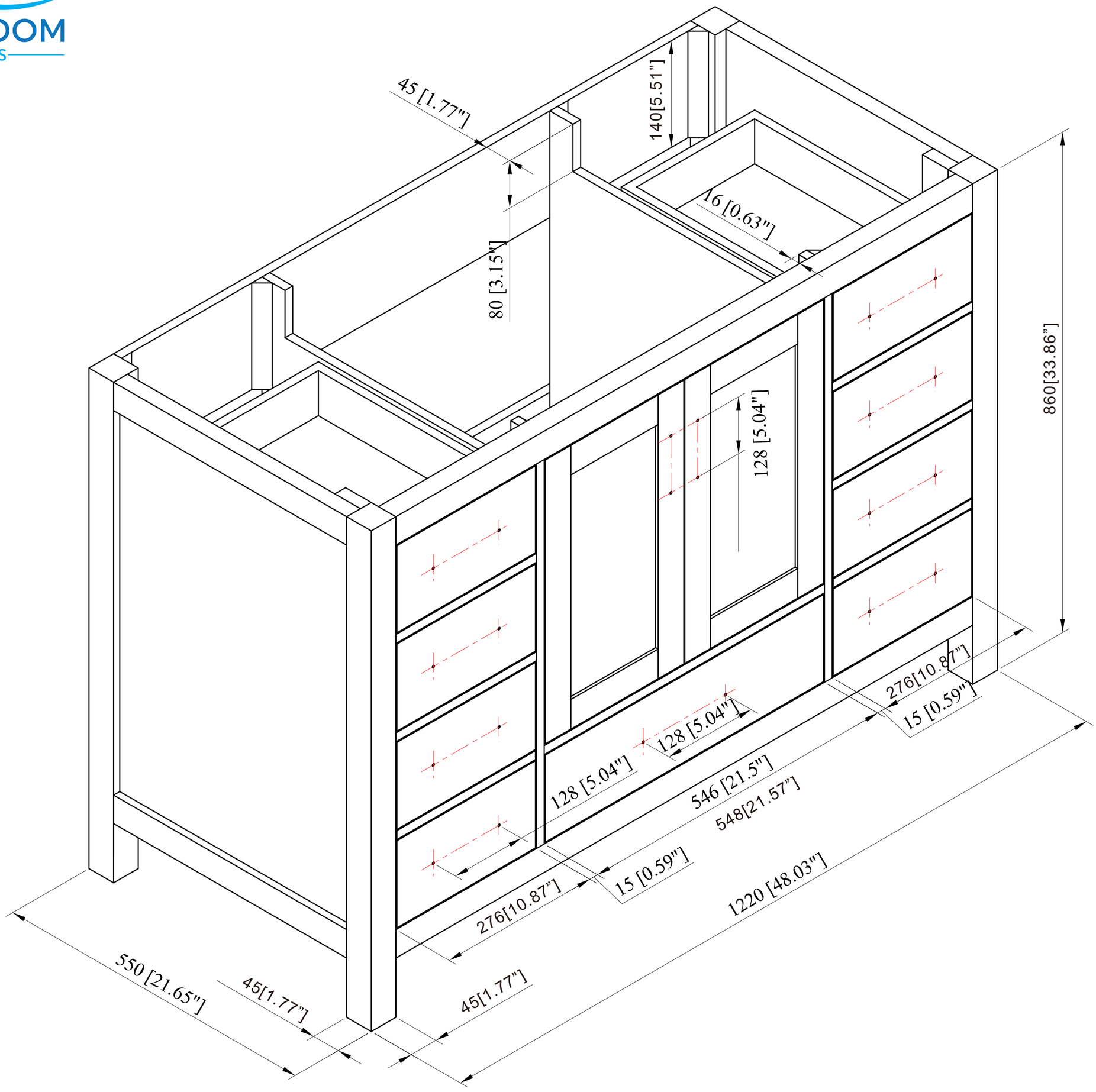

SERA BATHROOM DESIGNS
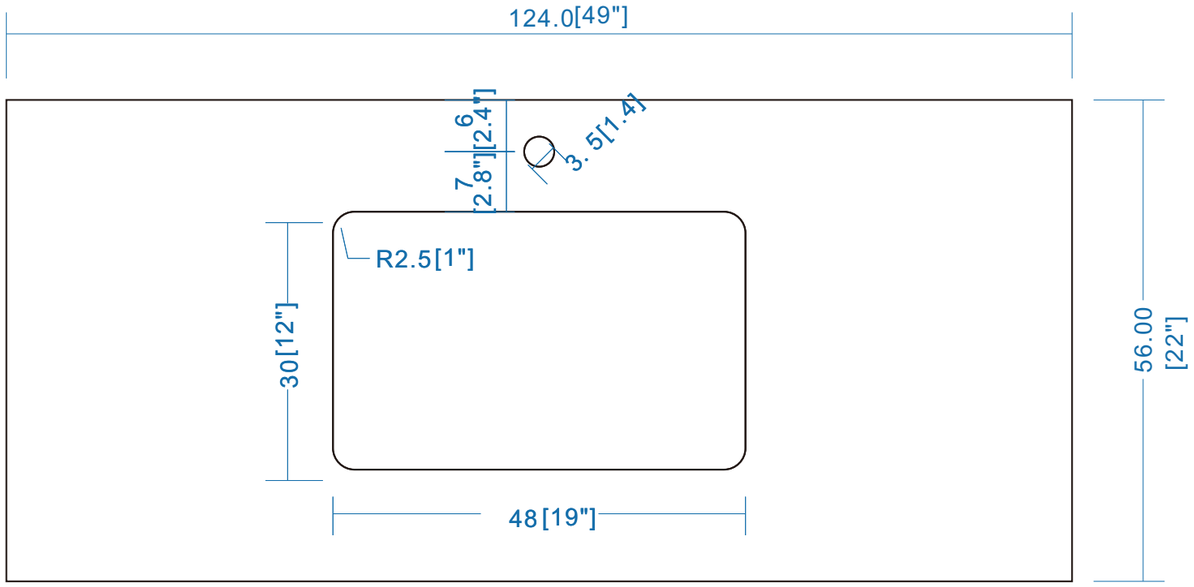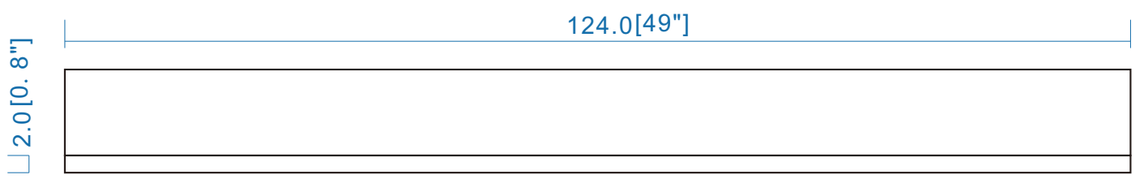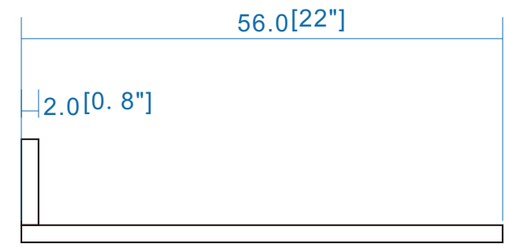
48-WAL-CMB-CML-ECM