SERA BATHROOM DESIGNS

Installation Instruction

AR-48-8066-KD

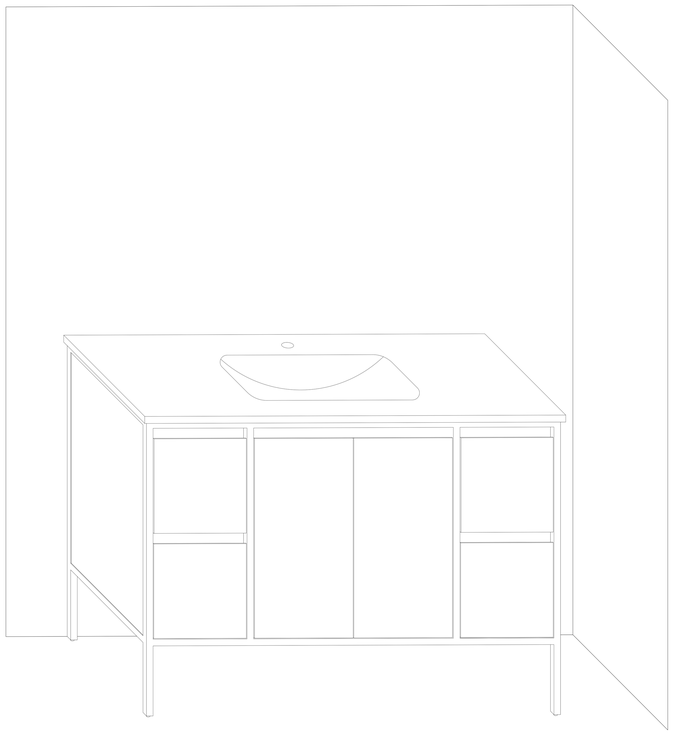

Please keep the boxes if you need return;
Check before installation;
Return won’ t be accepted afterwards;

Installation tools (Not include)

Name	Pic	Name	Pic
Electric Drill	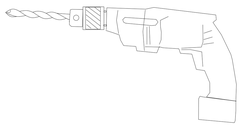	Cross Screwdriver	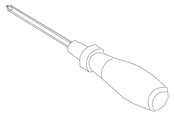
Hammer	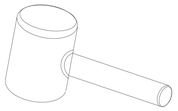	Pencil	
Wrench		Glass Cement	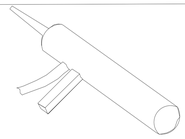
Levelling Rod	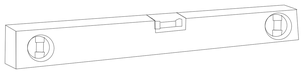		
Taplline	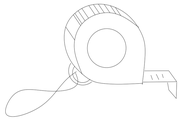		

Sparements

Code	Pic	Qty	Code	Pic	Qty
H1	(φ4×14mm)	82	H2		44
H3		44	H5	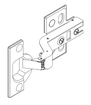	4
H6 (Fixed on iron frame)	(φ6×15mm)	16	H7		4
H8		4	H9 (Fixed on iron frame)	(φ6×25mm)	2
H15	(φ3×16mm)	8	F	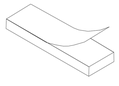	4
H4-1		12	H4-2		32

Structural Diagram

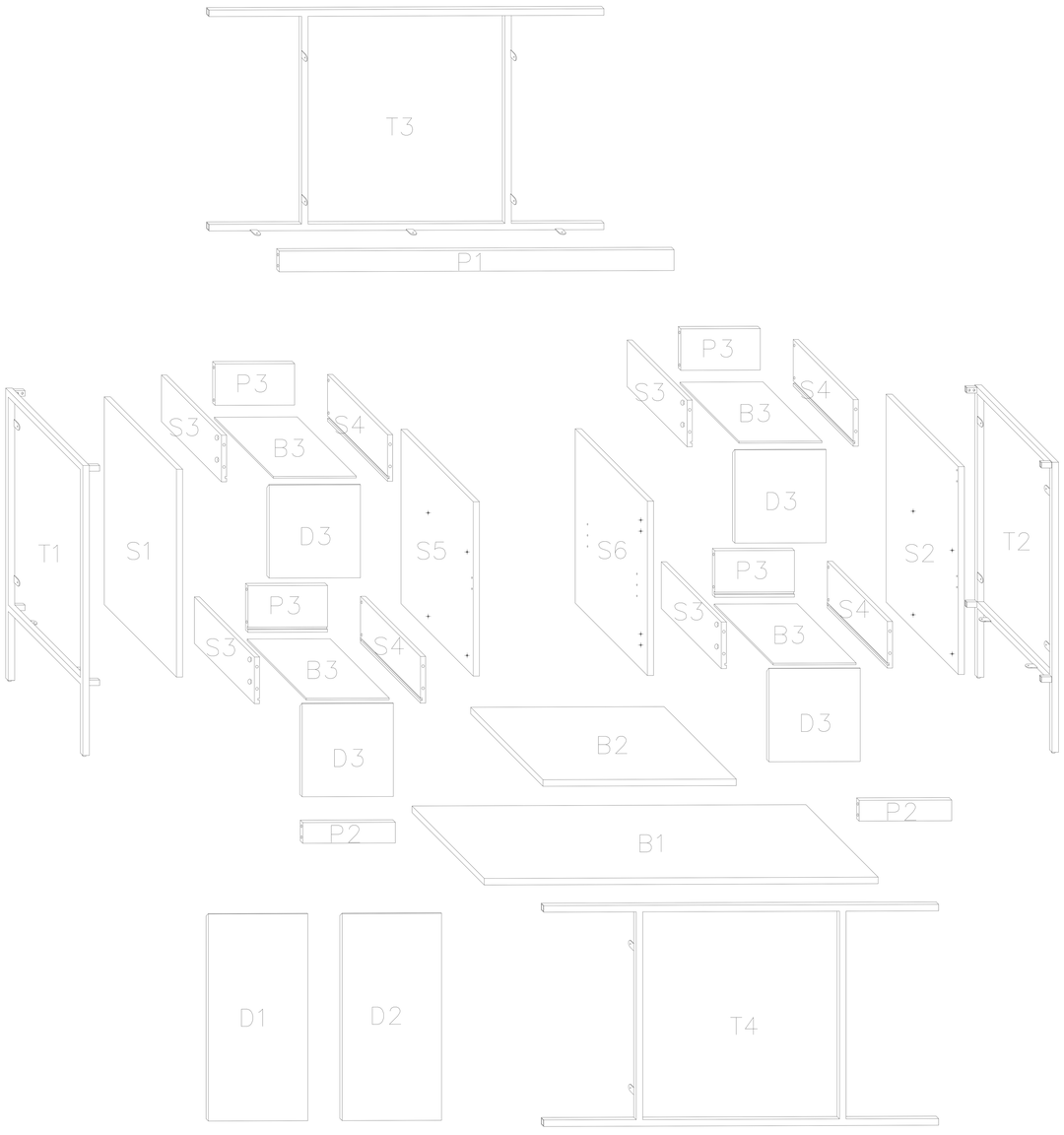

Step1

H6: X16

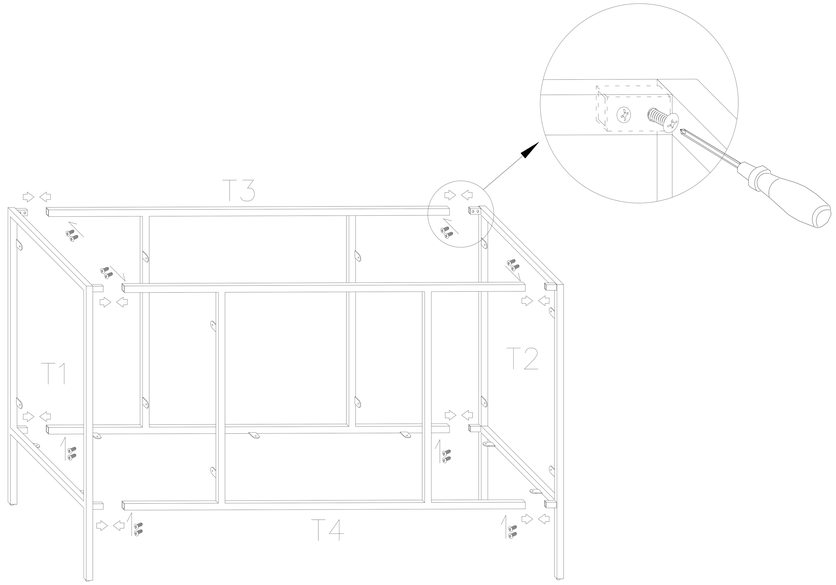

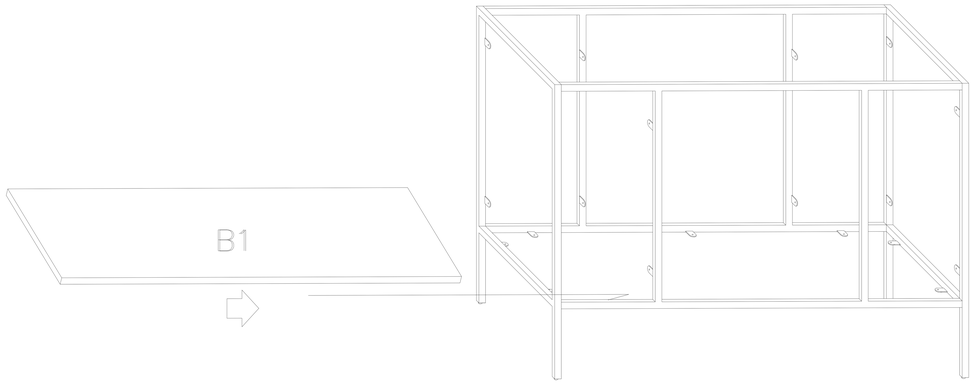

Step 2

H1: (ϕ4×14mm) X10

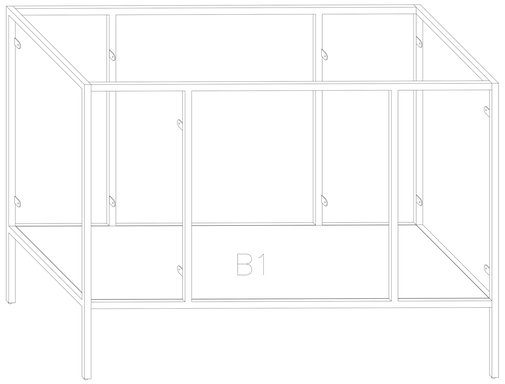

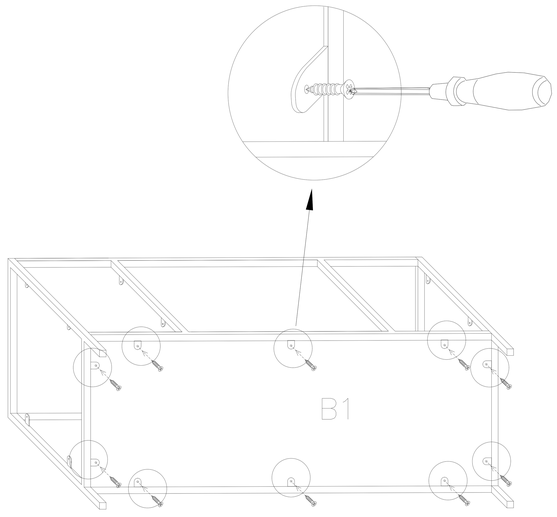

Step 3

H1:	X8	H3:	X4
H2:	X4	H4-1:	X4

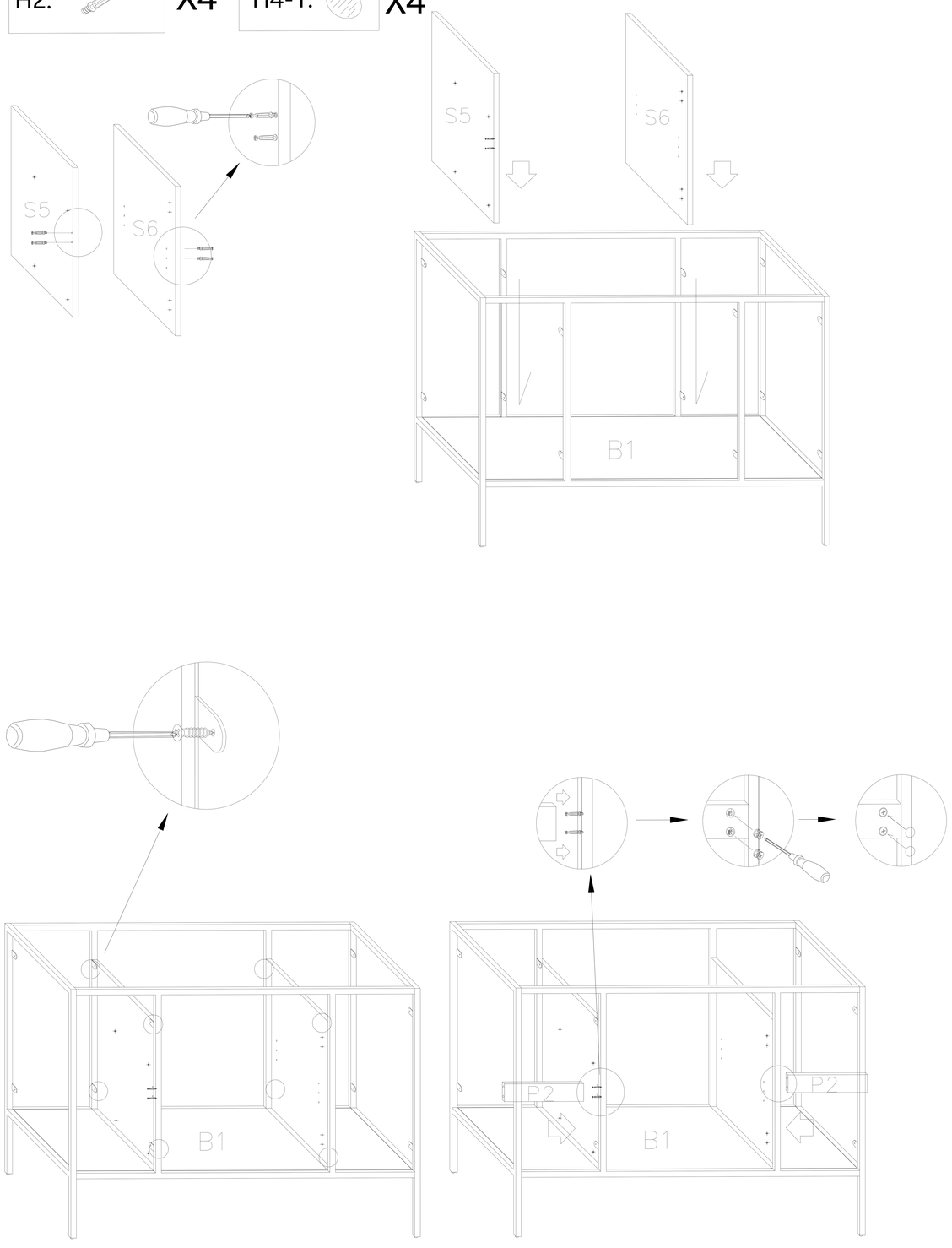

Step 4

H1:	(ϕ4×14mm)	X4	
H2:		X4	
H3:		X4	
H4-1:		X4	

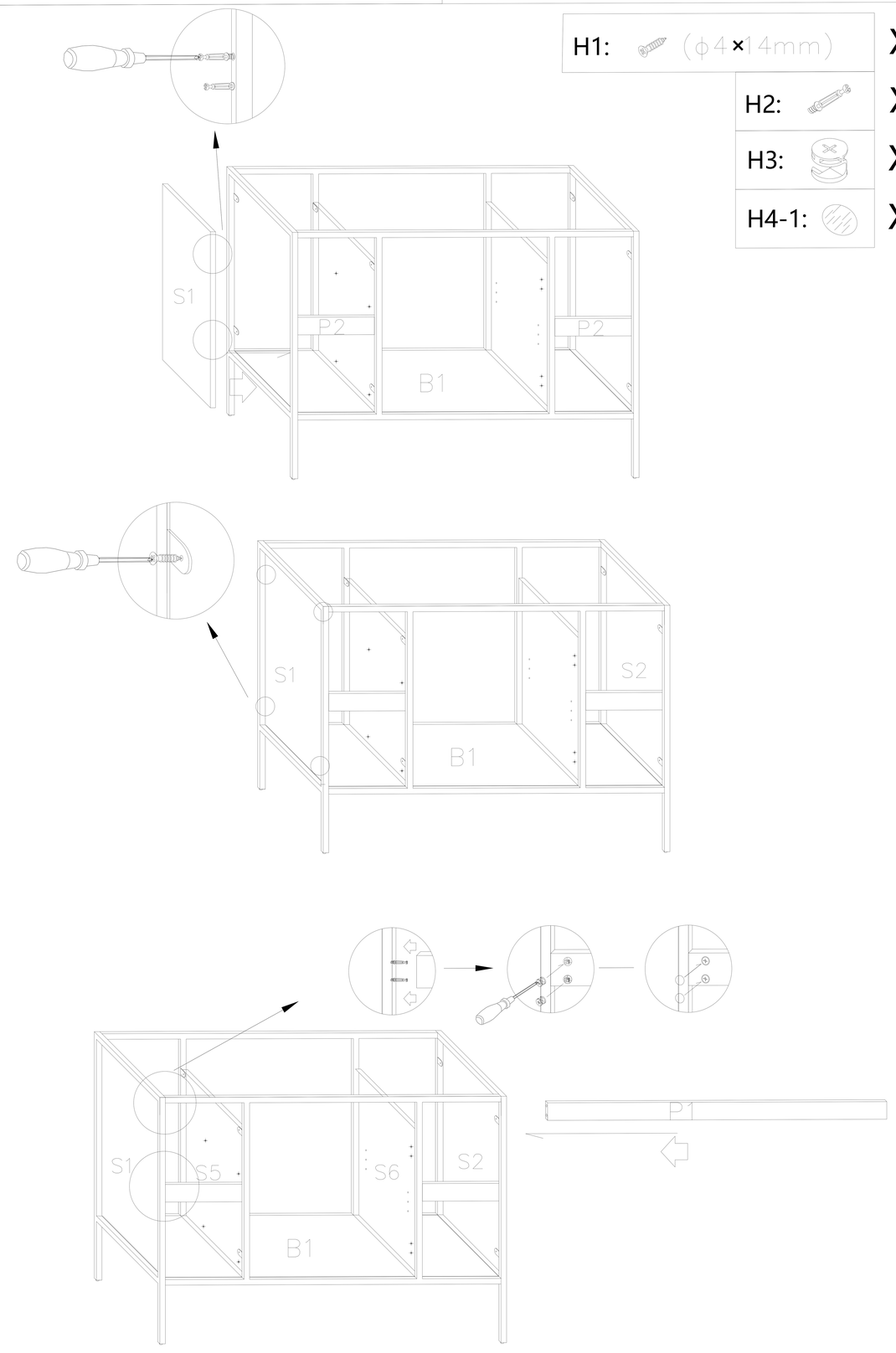

Step 5

H1:	X4	H3:	X4
H2:	X4	H4-1:	X4

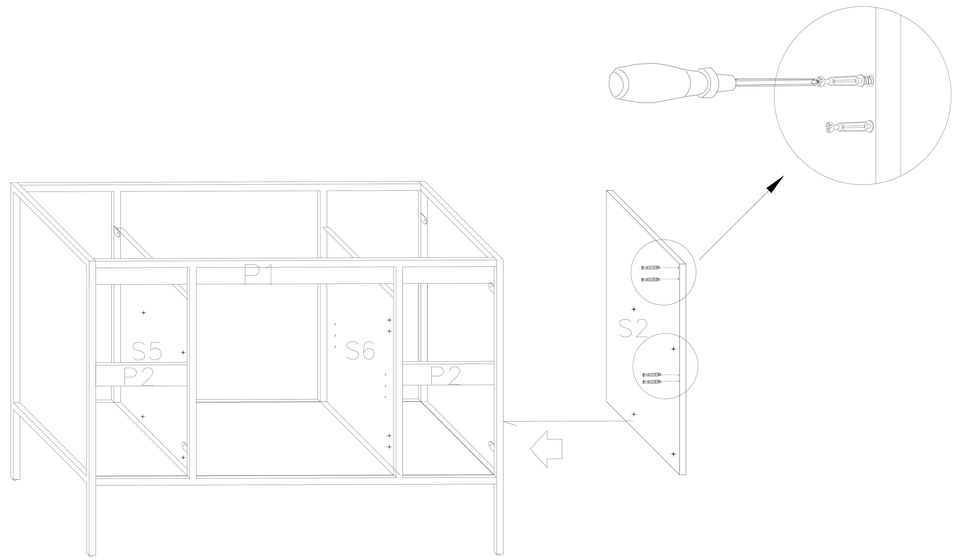

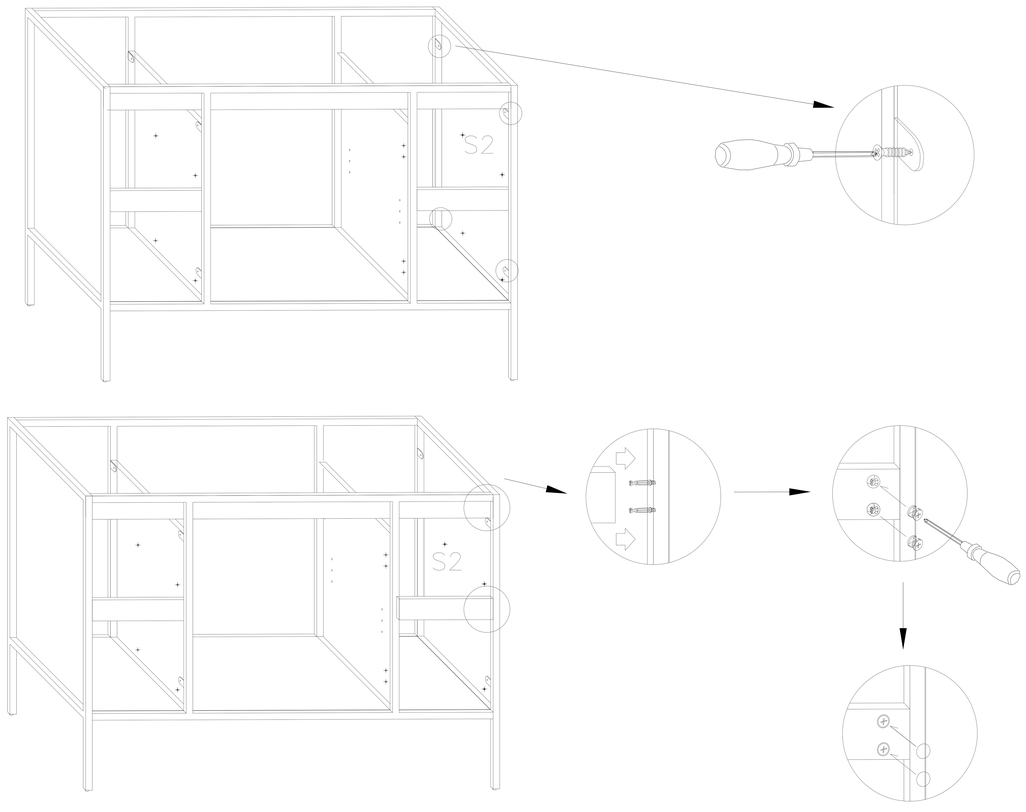

Step 6

H9:	X2

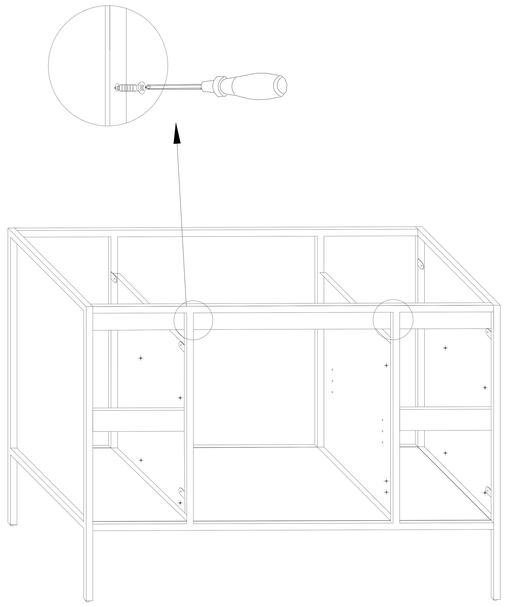

Step7

H1: (ϕ4×14mm)	X24	H7: L R	X4

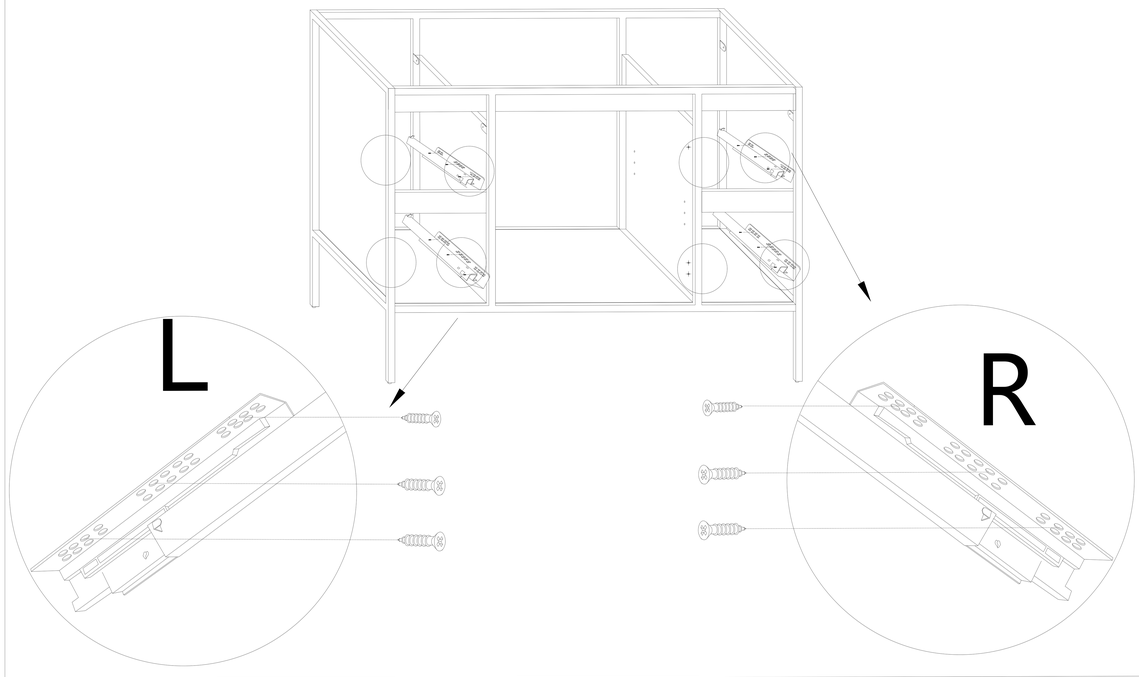

Step 8

H2: X32

H4-2: X32

H3: X32

H15: (ϕ3×16mm) X8

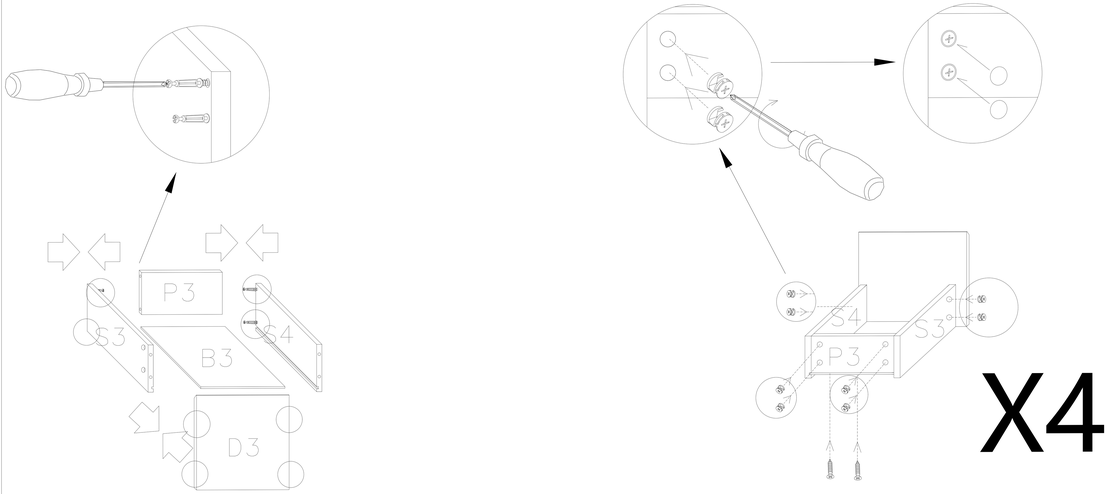

Step 9

H1: (ϕ4×14mm) X8

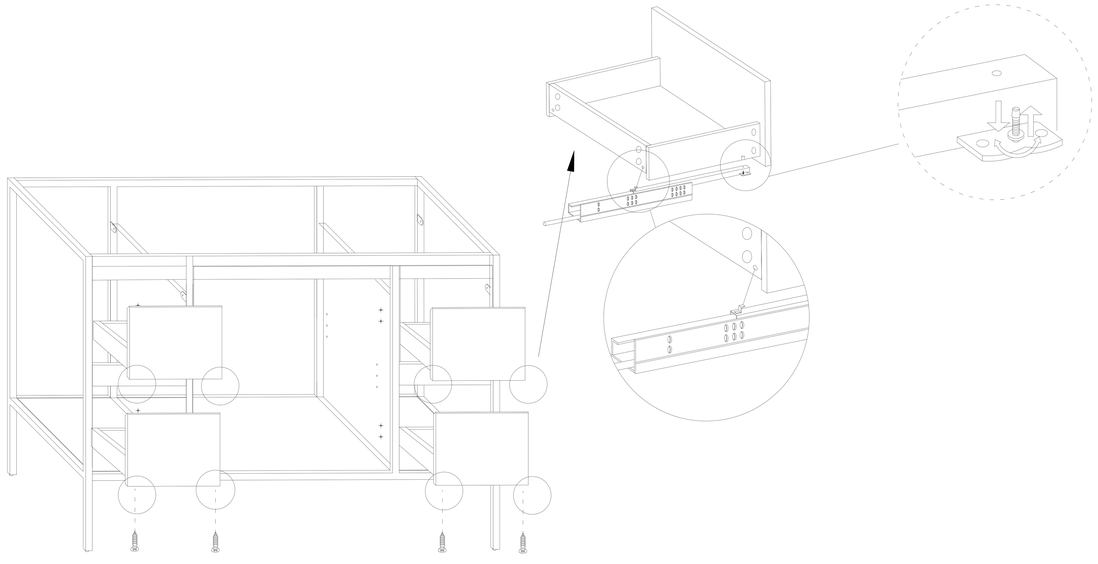

Step 10 Door Adjustment

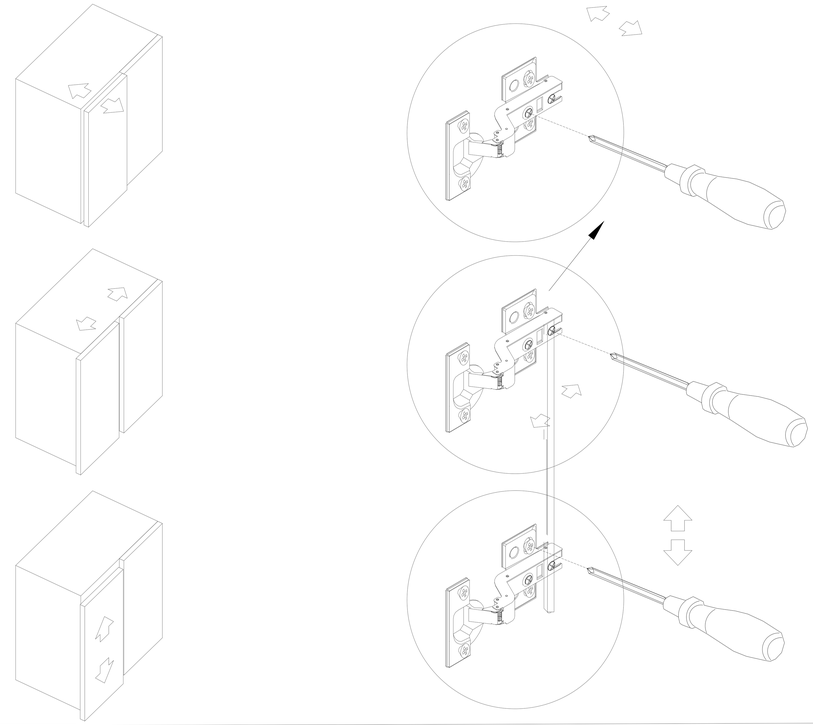

Step11

H1: (ϕ4×14mm) X24

H5: X4

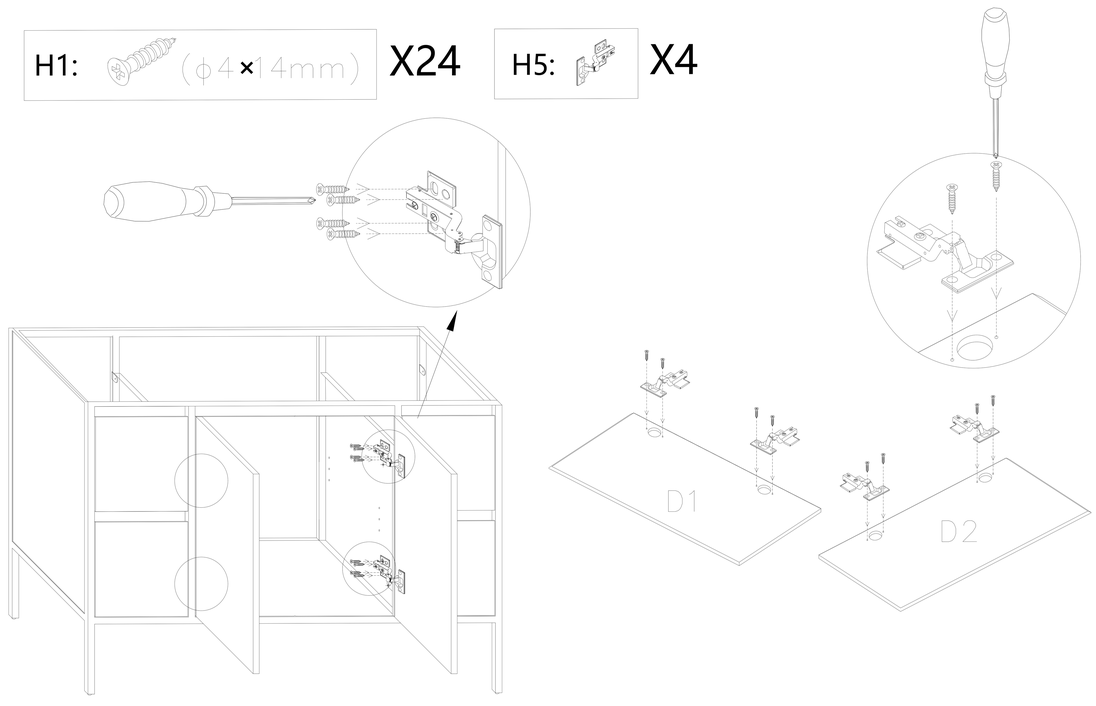

Step 12

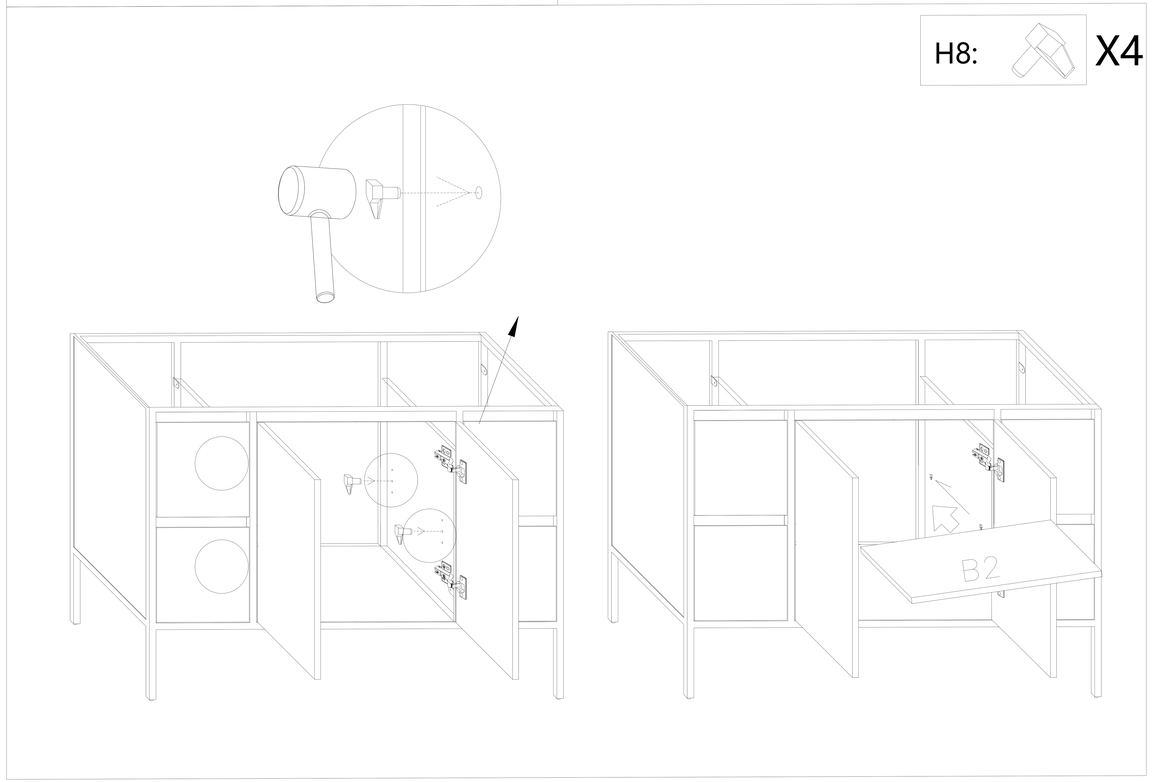

Step 13

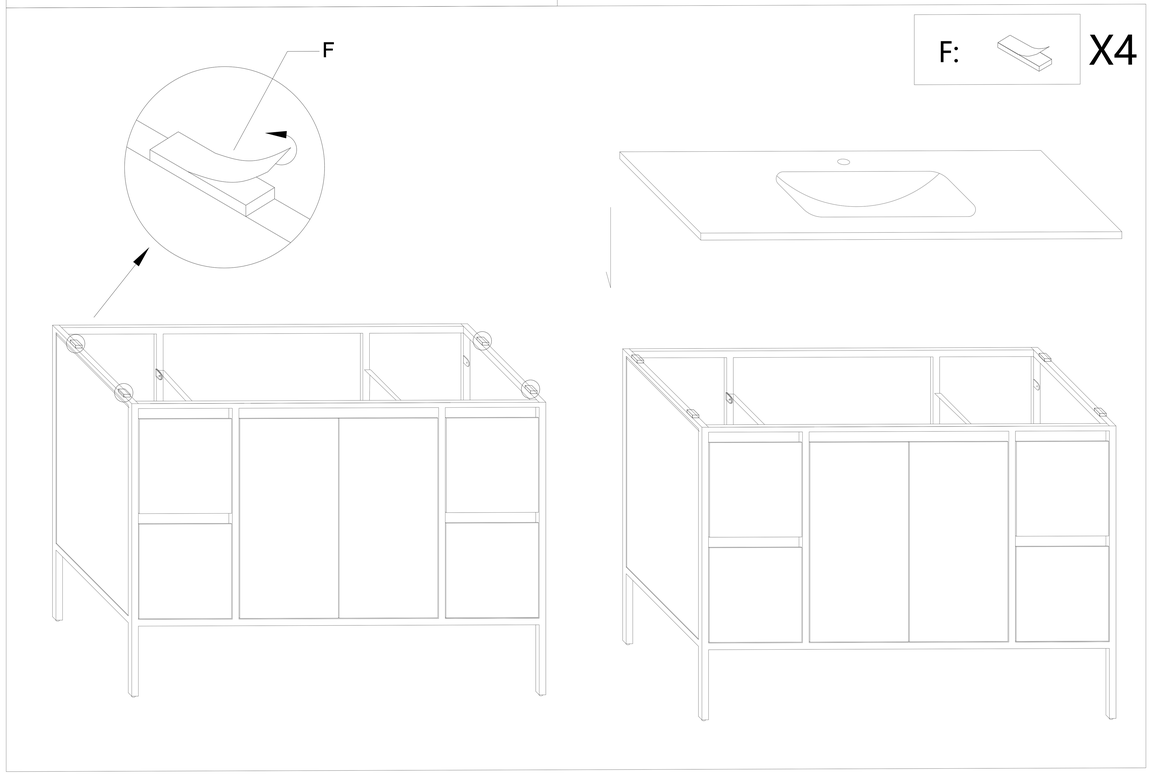

Step 14

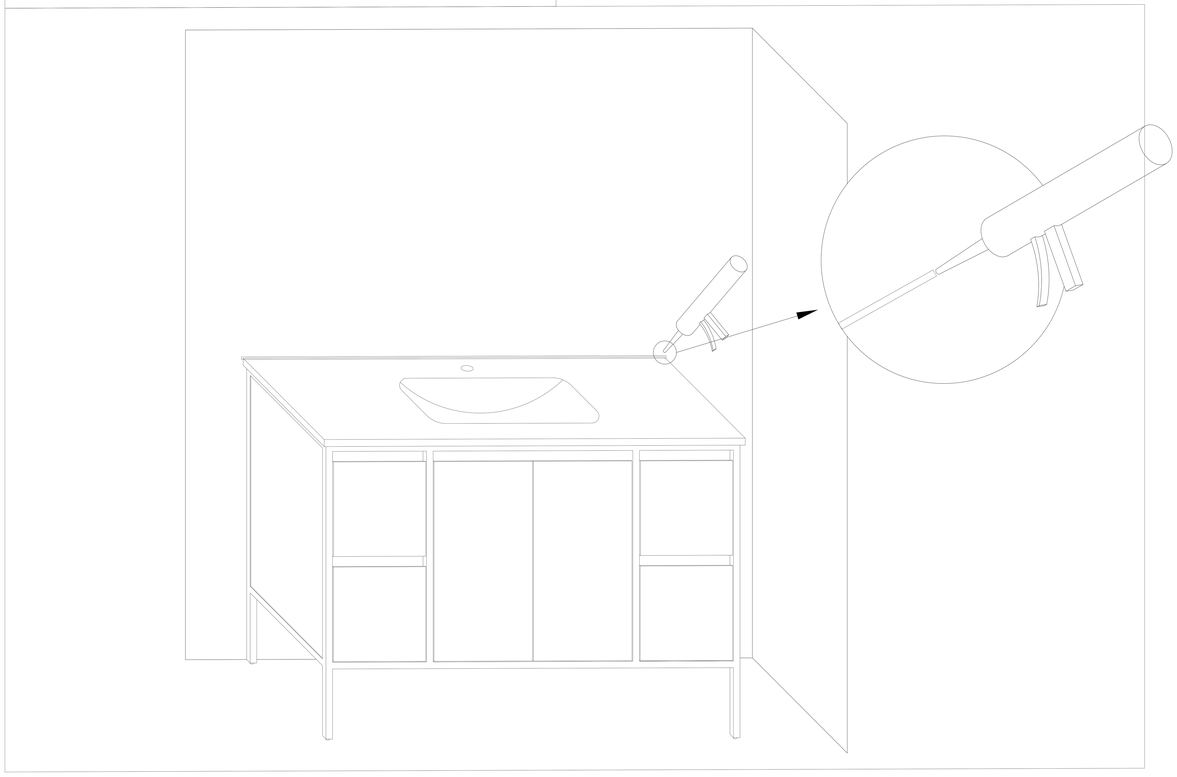
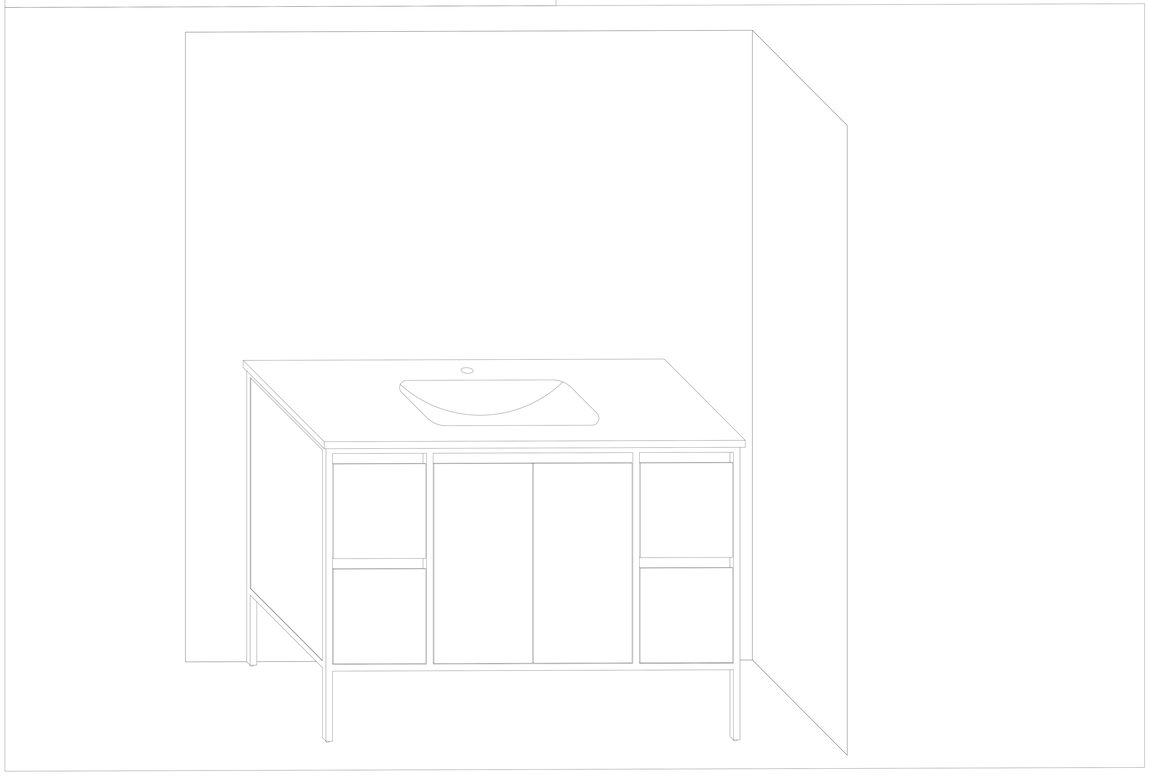
Step 15