SERA
BATHROOM
DESIGNS

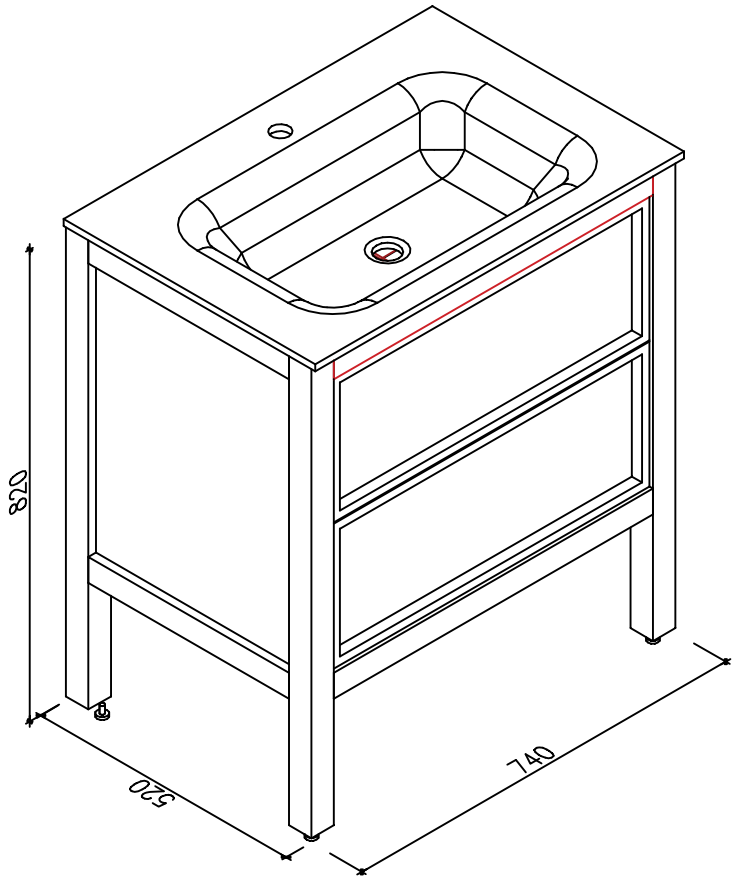

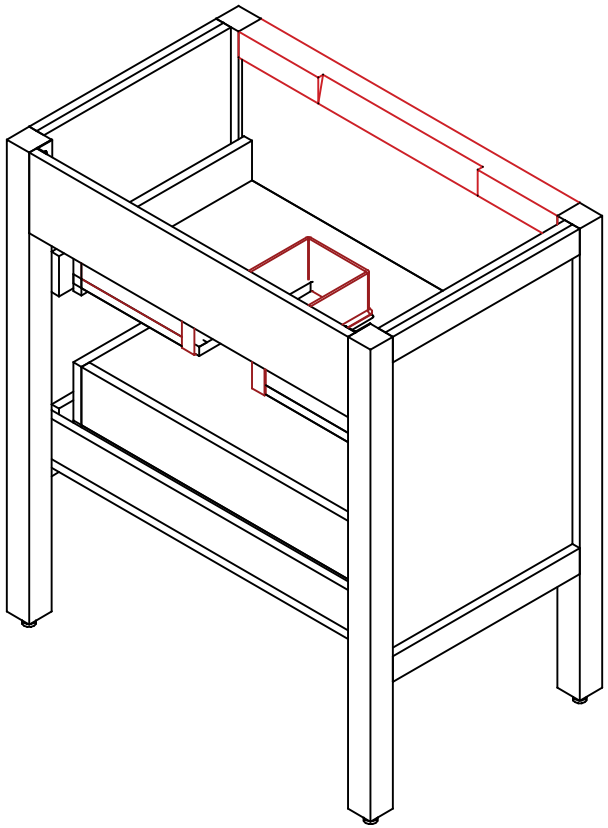

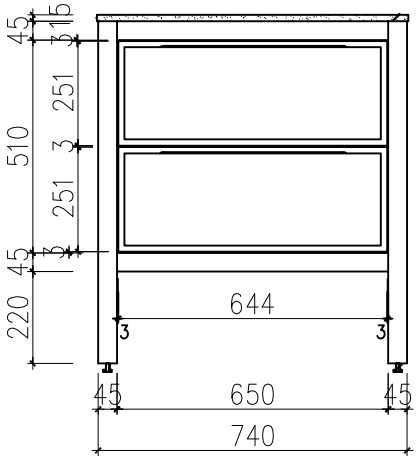

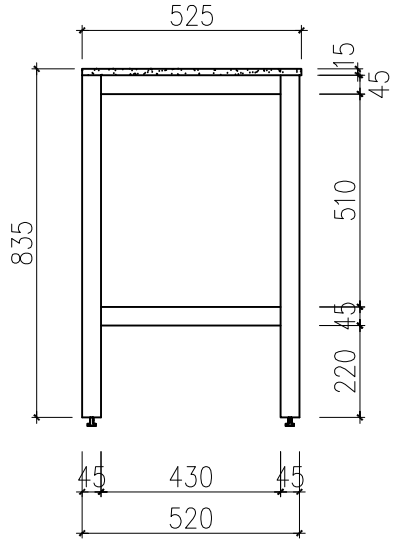

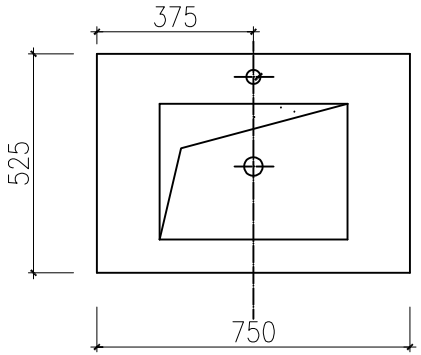

SERA BATHROOM DESIGNS

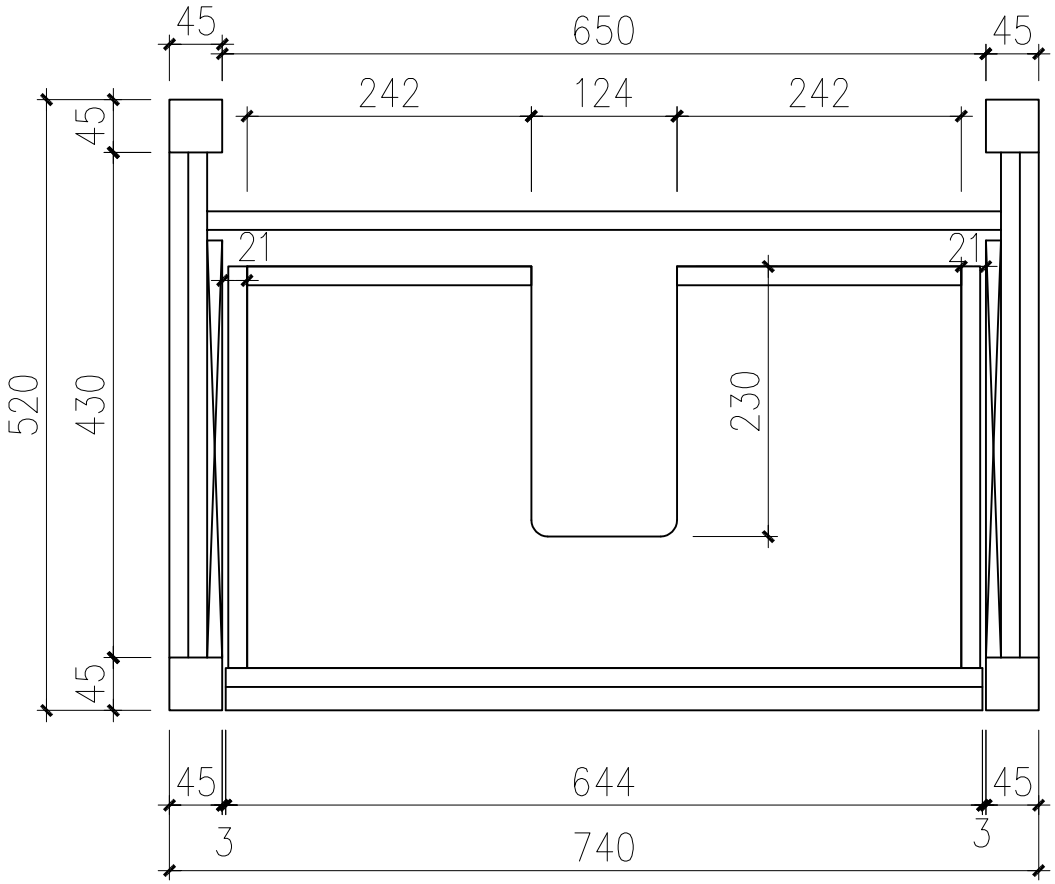

SERA BATHROOM DESIGNS

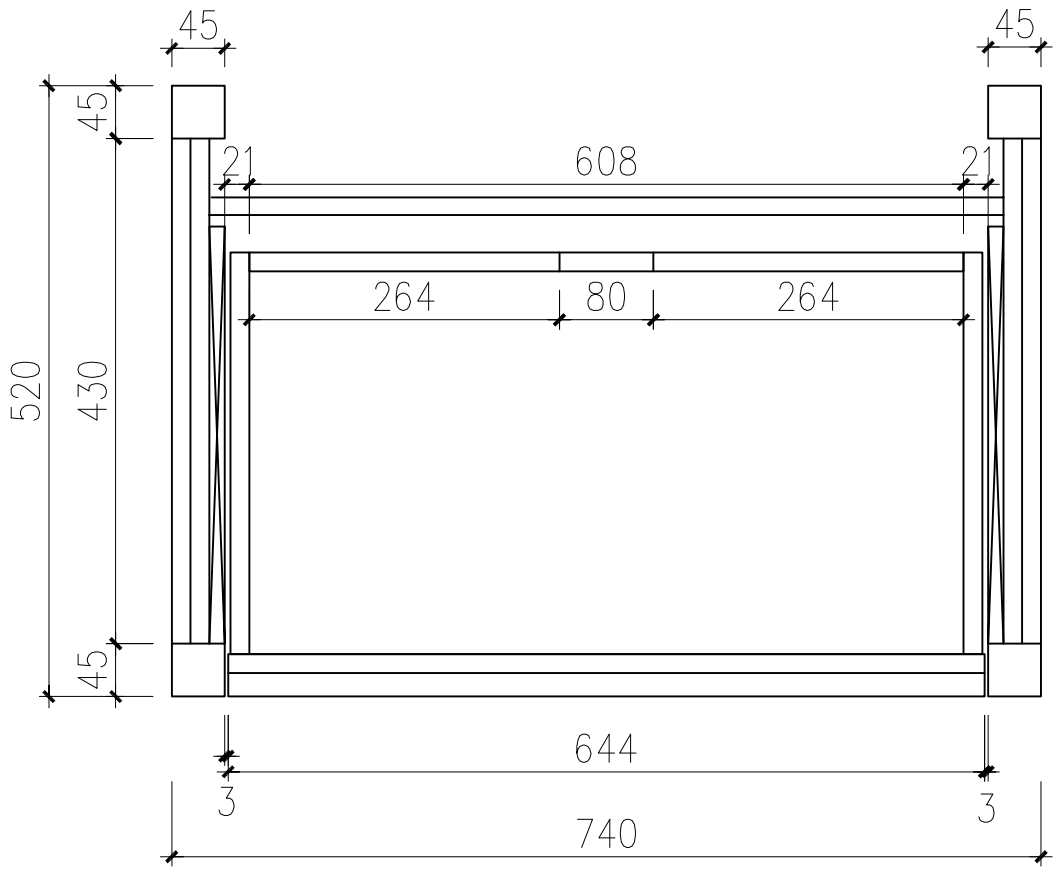

SERA BATHROOM DESIGNS

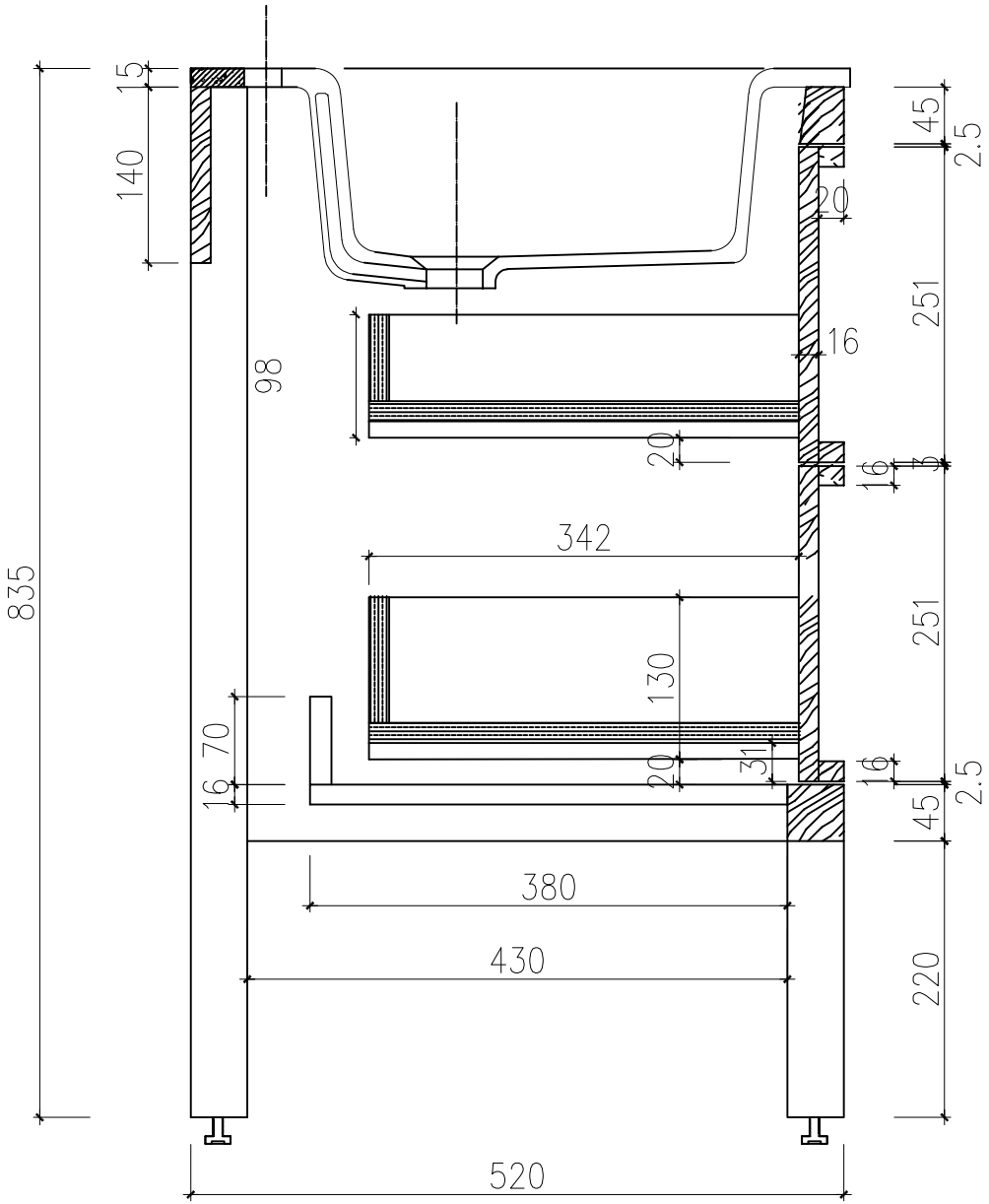

SERA BATHROOM DESIGNS