SERA BATHROOM DESIGNS

30-BRG-MC-LG

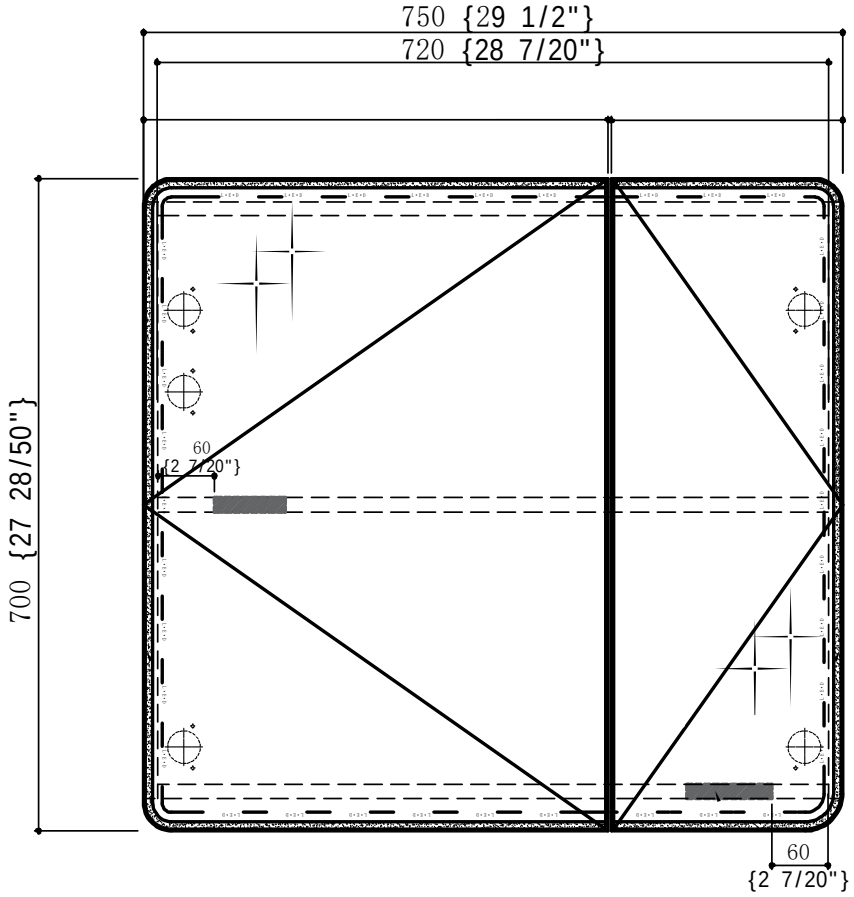

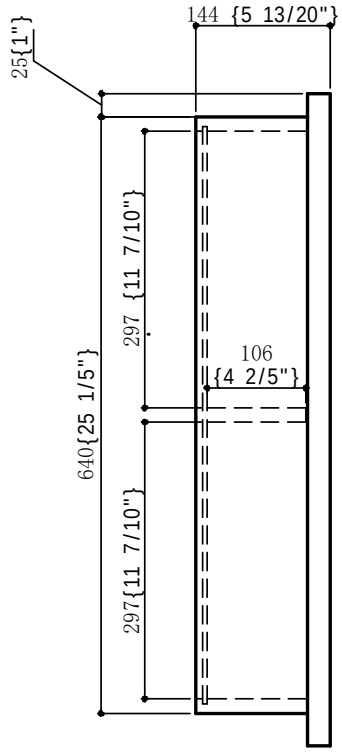
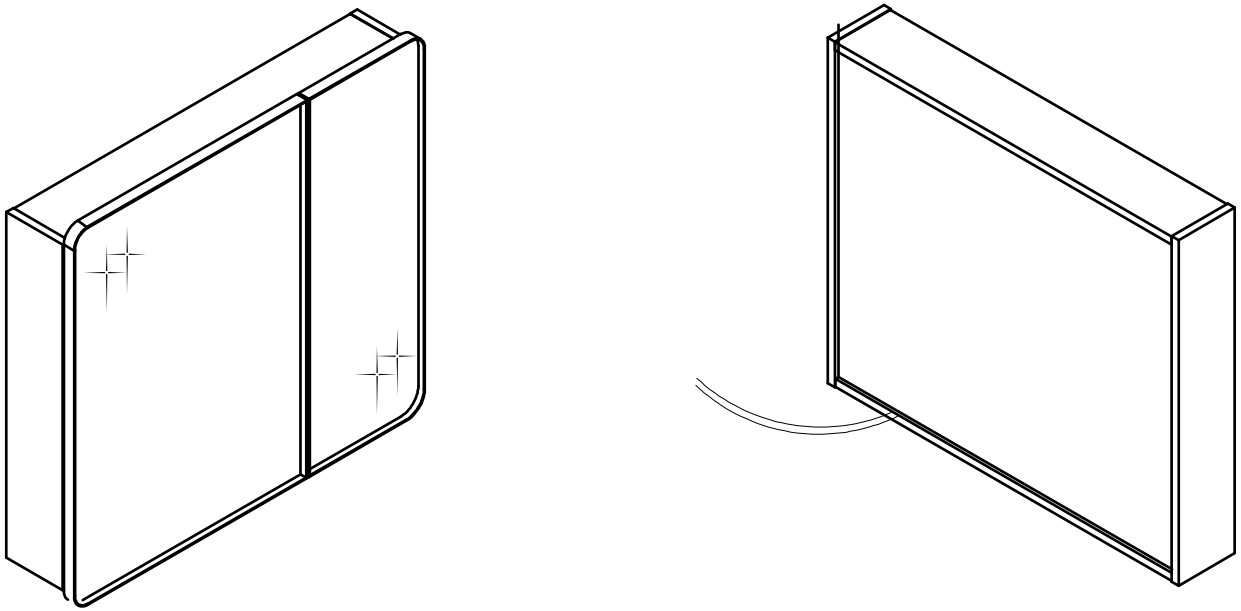
SERA
BATHROOM
DESIGNS