2W-607932-CHR-CL-PF-PKG

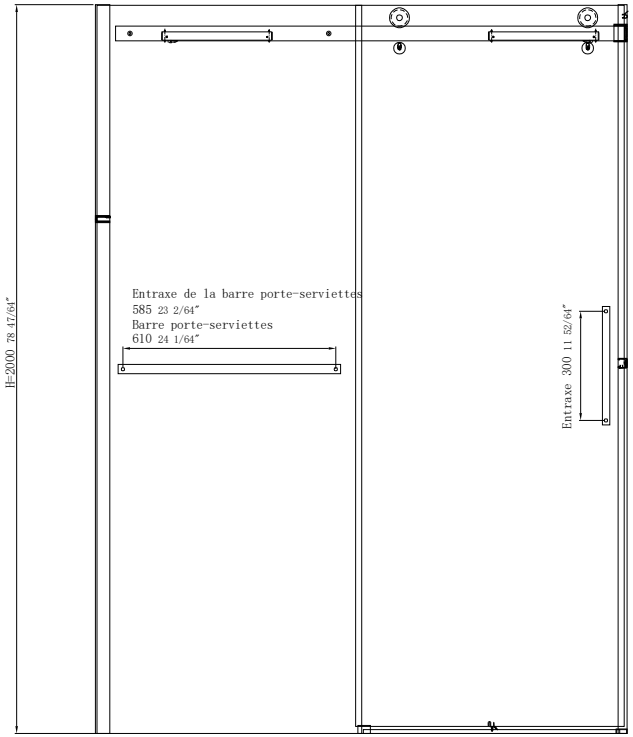

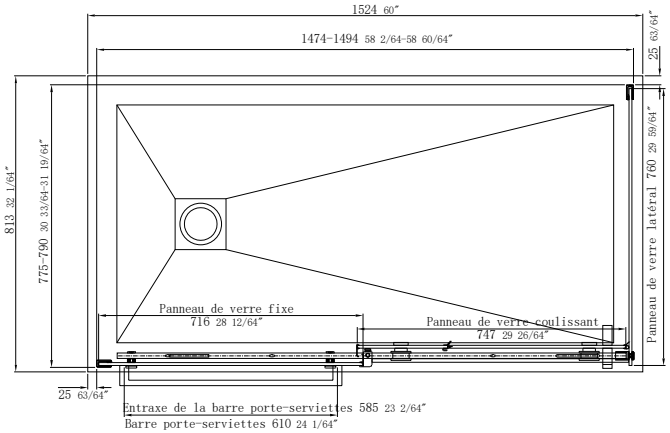

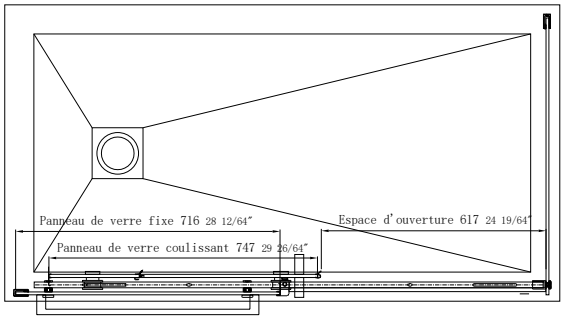
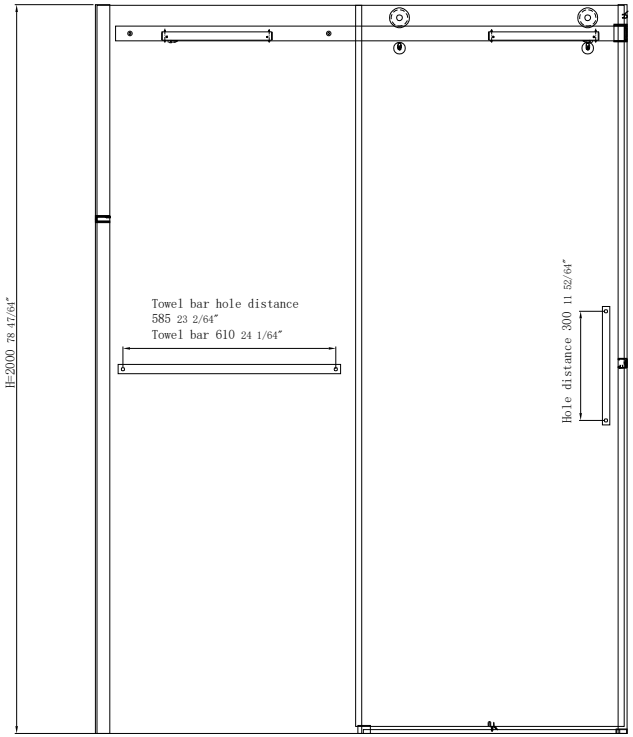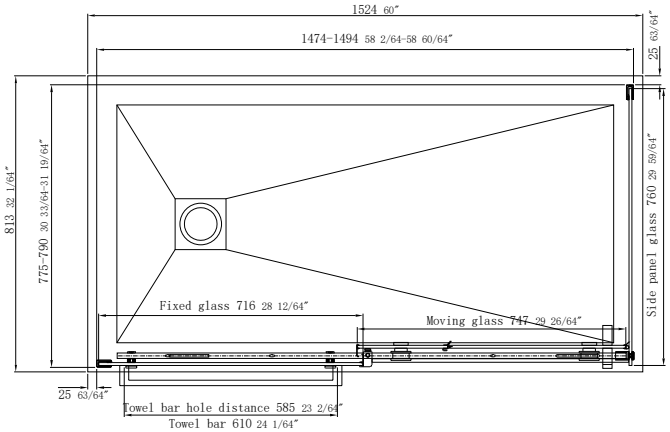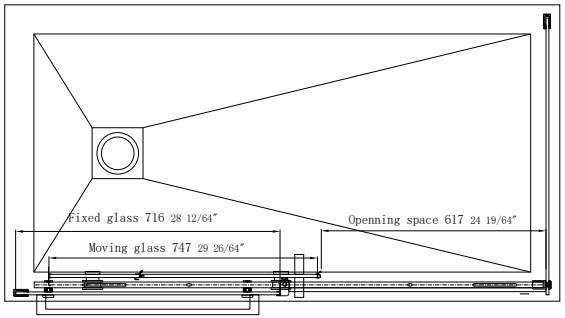
2W-607932-CHR-CL-PF-PKG