SERA BATHROOM DESIGNS

Installation Instruction

AR-24-8066-KD

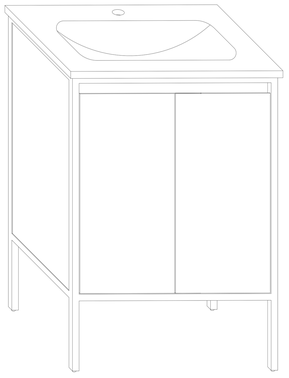

Please keep the boxes if you need return;
Check before installation;
Return won’ t be accepted afterwards;

Installation tools (Not include)

Name	Pic	Name	Pic
Electric Drill	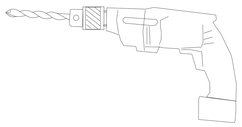	Cross Screwdriver	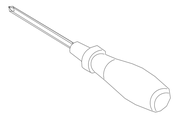
Hammer	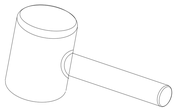	Pencil	
Wrench		Glass Cement	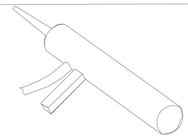
Levelling Rod	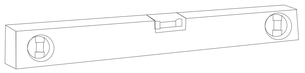		
Taplline	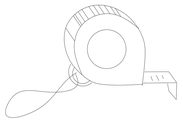		

Sparements

Code	Pic	Qty	Code	Pic	Qty
H1	(φ4×14mm)	40	H2		4
H3		4	H4		4
H5	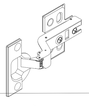	4	H6 (Fixed on iron frame)	(φ6×15mm)	16
H8		4	F	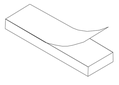	4

Step 8

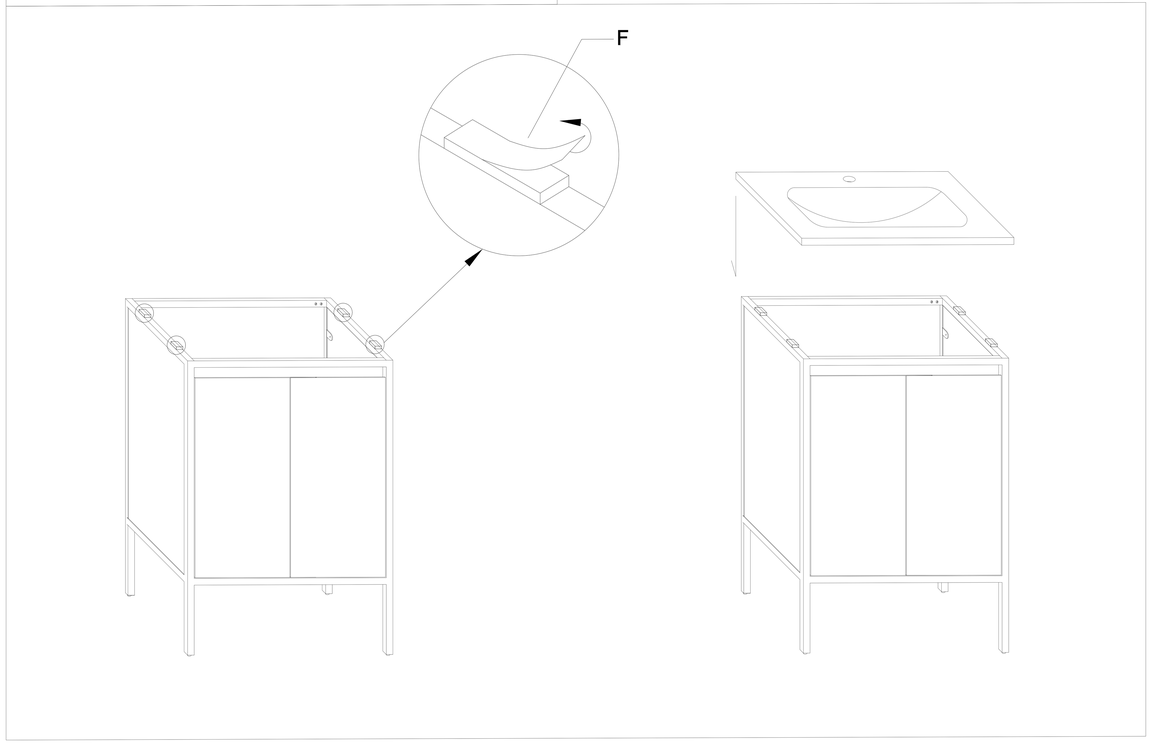

Step 9

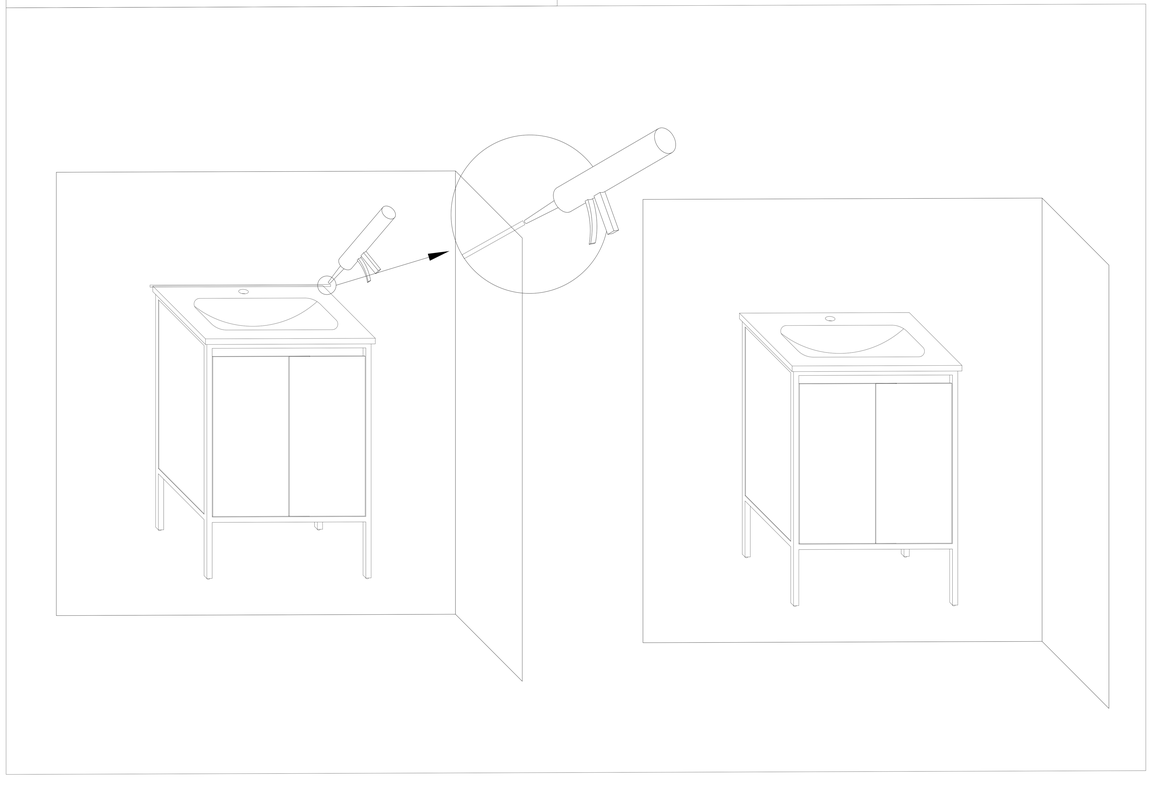

Step 6

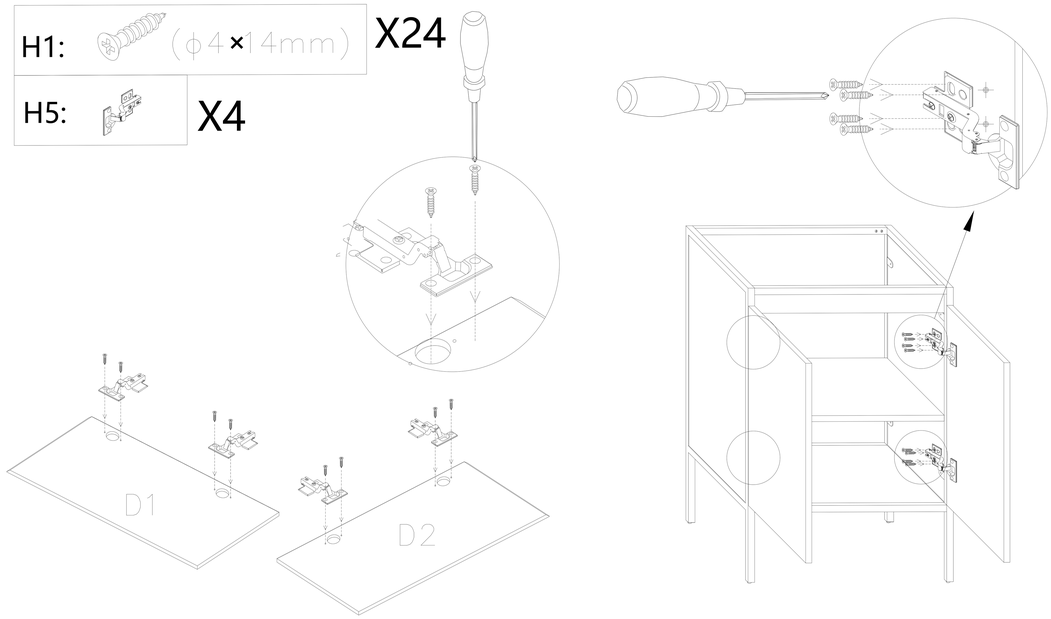

Structural Diagram

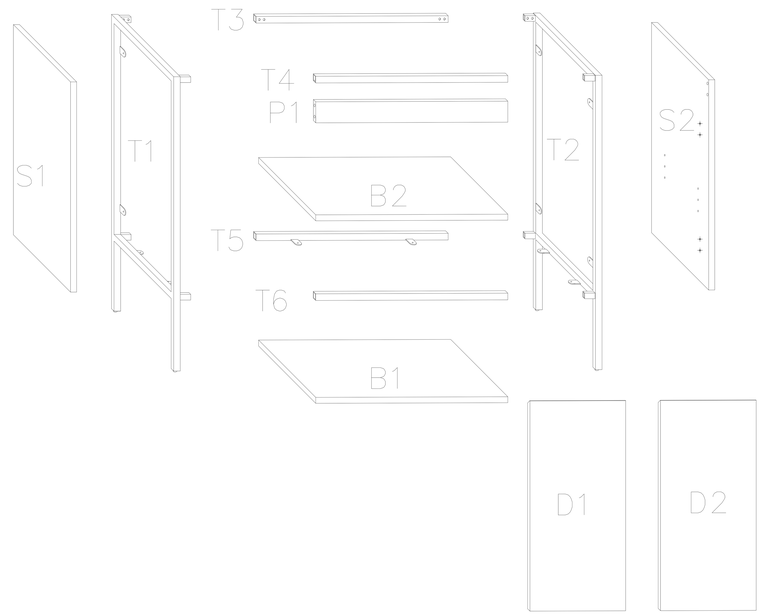

Step 7 Door Adjustment

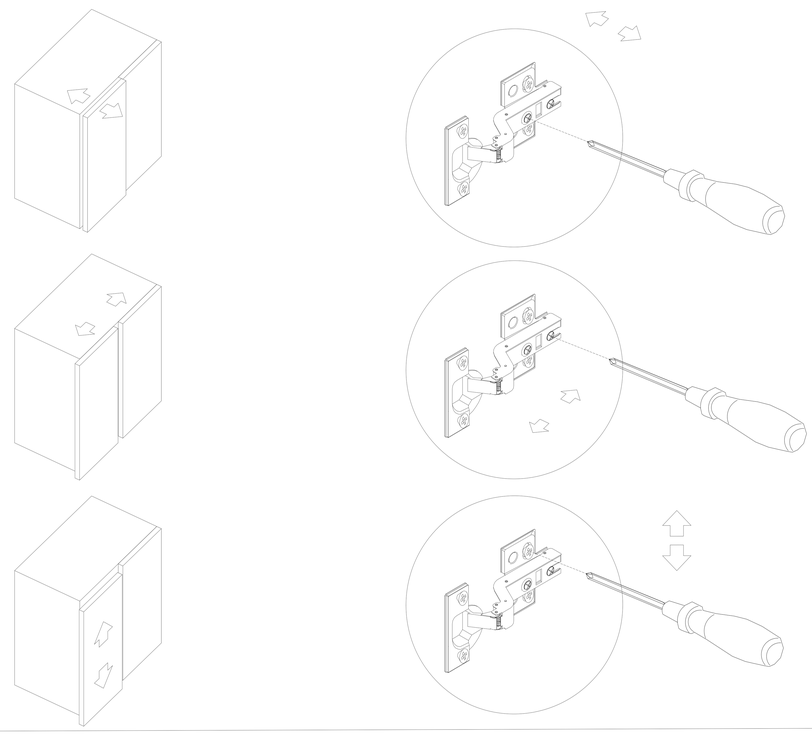

Step 1

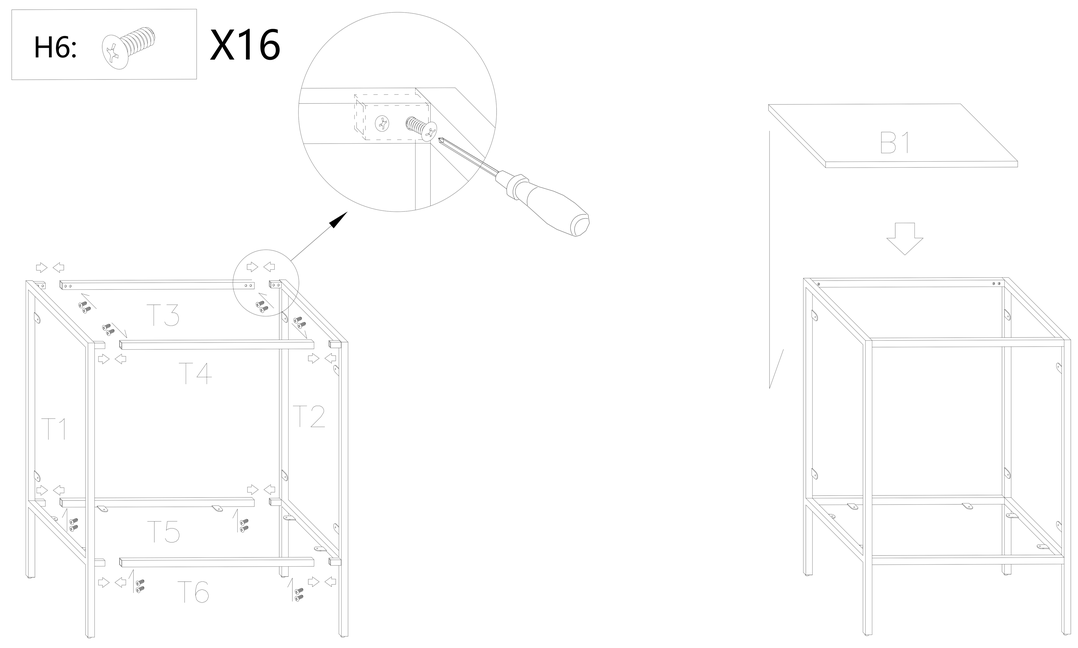

Step 2

H1: (ϕ4×14mm) X8

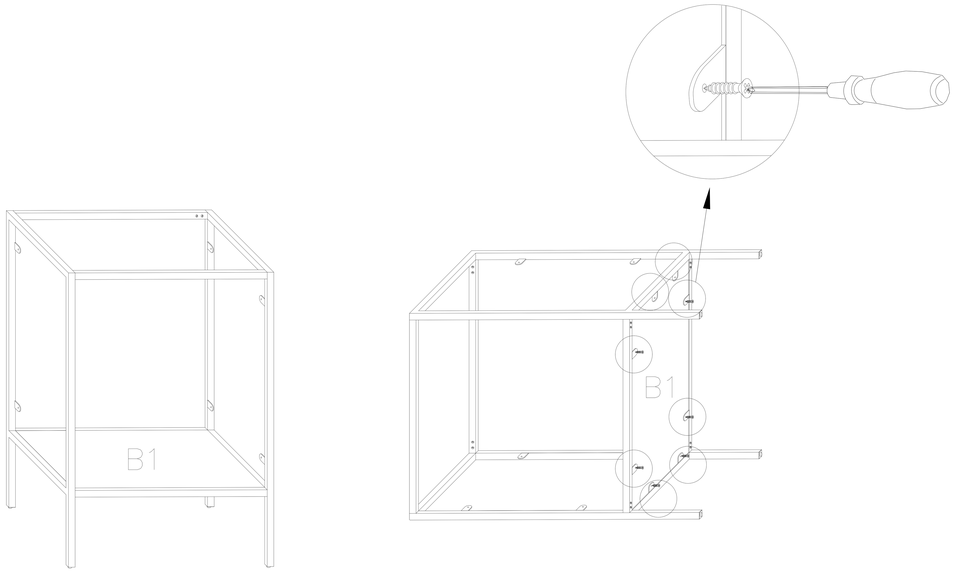

Step 3

H2: X4

H3: X4

H4: X4

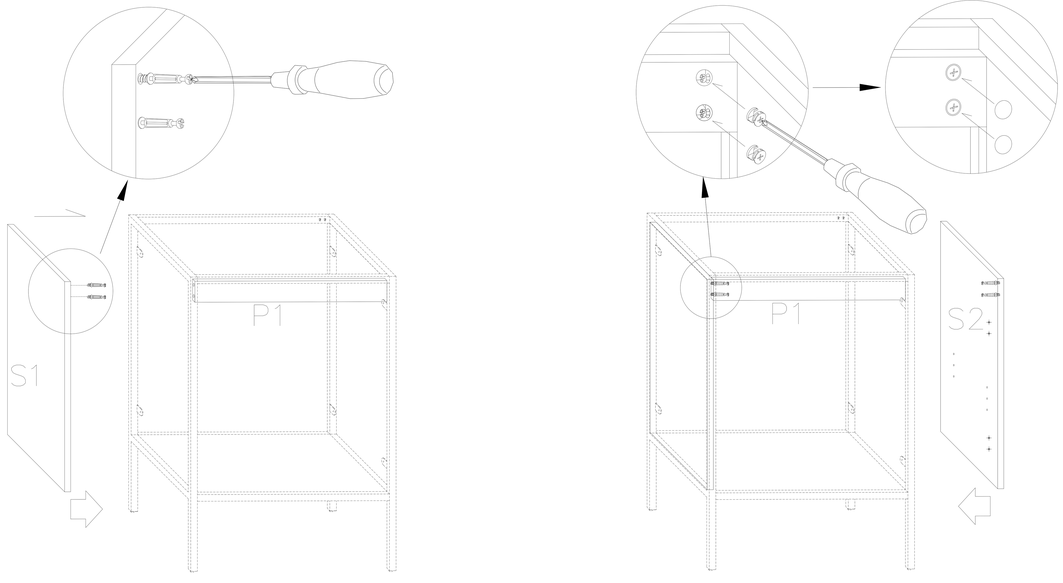

Step 4

H1: (ϕ4×14mm) X8

H8: X4

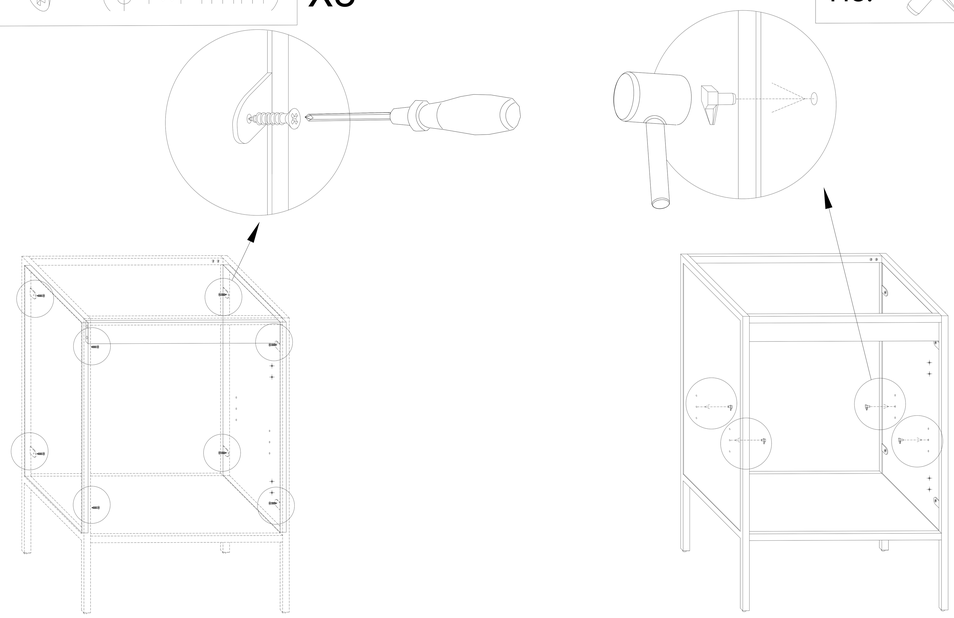
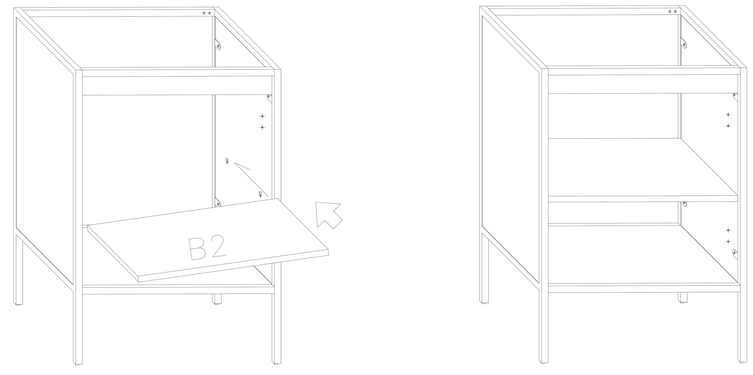
Step 5